YAMAHA Electone®

EL-90/EL-70

SERVICE MANUAL



EL-90

YAMAHA CORP.

001450

2.665K-8951 Ⓚ Printed in Japan '91.6

■CONTENTS

SPECIFICATIONS 4
PANEL LAYOUT 6
CIRCUIT BOARD LAYOUT 8
REGISTRATION MENU LIST 10
KEYBOARD PERCUSSION ASSIGNMENTS 12
RHYTHM PROGRAMMING PERCUSSION SOUNDS ... 13
MESSAGES ON THE MDR LED DISPLAY 14
DISASSEMBLY PROCEDURE 15
LSI PIN DESCRIPTION 28
IC BLOCK DIAGRAM 35
CIRCUIT BOARDS 38
MIDI SPECIFICATIONS 110
MIDI IMPLEMENTATION CHART 115
TEST PROGRAM 116
EL-90 PARTS LIST
EL-70 PARTS LIST



EL-70

IMPORTANT NOTICE

This manual has been provided for the use of authorized Yamaha Retailers and their service personnel. It has been assumed that basic service procedures inherent to the industry, and more specifically Yamaha Products, are already known and understood by the users, and have therefore not been restated.

WARNING: Failure to follow appropriate service and safety procedures when servicing this product may result in personal injury, destruction of expensive components and failure of the product to perform as specified. For these reasons, we advise all Yamaha product owners that all service required should be performed by an authorized Yamaha Retailer or the appointed service representative.

IMPORTANT: The presentation or sale of this manual to any individual **or** firm does not constitute authorization, certification, recognition of any applicable technical capabilities, or establish a principle-agent relationship of any form.

The data provided is believed to be accurate and applicable to the unit(s) indicated on the cover. The research, engineering, and service departments of Yamaha are continually striving to improve Yamaha products. Modifications are, therefore, inevitable and changes in specification are subject to change without notice or obligation to retrofit. Should any discrepancy appear to exist, please contact the distributor's Service Division.

WARNING: Static discharges can destroy expensive components. Discharge any static electricity your body may have accumulated by grounding yourself to the ground buss in the unit (heavy gauge black wires connect to this buss).

IMPORTANT: Turn the unit OFF during disassembly and parts replacement. Recheck all work before you apply power to the unit.

WARNING: CHEMICAL CONTENT NOTICE!

The solder used in the production of this product contains LEAD. In addition, other electrical/electronic and/or plastic (where applicable) components may also contain traces of chemicals found by the California Health and Welfare Agency (and possibly other entities) to cause cancer and/or birth defects or other reproductive harm.

DO NOT PLACE SOLDER, ELECTRICAL/ELECTRONIC OR PLASTIC COMPONENTS IN YOUR MOUTH FOR ANY REASON WHAT SO EVER!

Avoid prolonged, unprotected contact between solder and your skin! When soldering, do not inhale solder fumes or expose eyes to solder/flux vapor!.

If you come in contact with solder or components located inside the enclosure of this product, wash your hands before handling food.

■SPECIFICATIONS

		EL-90
KEYBOARD	Keyboards Touch Tone	Upper: 49 keys ($C_2 \sim C_6$), Lower: 49 keys ($C_1 \sim C_5$), Pedal: 20 keys ($C_0 \sim G_1$) Initial, After (Upper, Lead, Lower, Pedal)
VOICE	Tone Generation	New AWM & FM
	Upper/Lower Keyboard (Upper Keyboard Voice 1, 2 Lower Keyboard Voice 1, 2)	Strings 1, 2, 3, 4, 5, Pizz. Strings, Tremolo Strings, Synth. Strings 1, 2; Organ 1, 2, 3, 4, Jazz Organ 1, 2, 3, Pop Organ 1, 2, Theatre Organ 1, 2, Accordion, Bandoneon; Brass 1, 2, 3, 4, Synth. Brass 1, 2; Piano 1, 2, Honky Tonk,Elec. Piano 1, 2, Harpsichord, Clavi.; Clarinet 1, 2, Synth. Clarinet; Guitar 1, 2, 3, Banjo, Mandolin, Elec. Guitar 1, 2, Muted Guitar, Distortion Guitar, Harp, Koto, Taisho Koto; Saxophone 1, 2, Soprano Sax., Sax. Ensemble; Vibraphone, Glockenspiel, Celesta, Marimba, Xylophone, Chime, Synth. Chime, Steel Drum; Chorus 1, 2, 3, Vocal; Cosmic 1, 2, 3, 4, 5, 6, 7, 8, 9; Tutti 1, 2, 3, 4, 5, 6; [Upper] Harmonica 1, 2; [Lower] Horn 1, 2, 3, Muted Horn; User 1-16; (56 Buttons/87 Voices) Volume Fine; Brilliance
	Lead (Upper) (Lead Voice)	Violin 1, 2, 3, 4, Pizz. Violin, Cello; Oboe 1, 2, English Horn, Bassoon 1, 2; Flute 1, 2, Piccolo, Recorder, Pan Flute, Whistle; Trumpet 1, 2, 3, 4, 5, Muted Trumpet, Trombone 1, 2, Muted Trombone, Flugel Horn; User 1-16; To Lower; (6 Buttons/27 Voices) Volume Fine; Brilliance
	Pedalboard (Pedalboard Voice 1, 2)	ContraBass 1, 2, Pizz. Bass, Upright Bass; Organ Bass 1, 2, 3, 4; Elec. Bass 1, 2, 3, Synth. Bass 1, 2, 3; Tuba, Timpani, Timpani Roll; User 1-16; To Lower; (12 Buttons/17 Voices) Volume Fine; Brilliance
	Voice Display	Upper, Lower, Lead, Pedal; Manual Balance
	Upper Flute Voice Lower Flute Voice	Flute Voices (16′, 8′, 5 1/3′, 4′, 2 2/3′, 2′, 1 3/5′, 1′); Attack (4′, 2 2/3′, 2′; Length; Mode: Each, First); Click; Response; Tremolo On/Off; Volume; 8 Presets; 8 User Voices; On/Off Control : Upper, Lower
VOICE EDIT		On/Off; Operator 1, 2, 3, 4: (Output Level, Attack Rate, Decay 1 Rate, Decay 1 Level, Decay 2 Rate, Release Rate); AWM: (Output Level, Cutoff, Resonance); Operator Selectors; Operator On/Off Buttons; Save: User: 1 ~ 16; (From) Voice Disk
MELODY ON CHORD		Mode: Off, 1, 2, 3; Knee: On/Off
EFFECT/ CONDITION	Digital Reverb	3Types: Room, Hall, Church; Length; Depth; Volume: Upper/Lower 1, 2, Flute Voice, Lead, Pedal 1, 2, Accompaniment, Percussion, Tremolo, Symphonic, Delay/Flanger (Upper, Lower, Pedal)
	Sustain	Upper (Knee), Lower (Knee), Pedal: Length
	Brilliance	Upper, Lead, Lower, Pedal: Control (Brilliant↔Mellow)
	Tremolo/Chorus	Upper, Lead, Lower, Pedal, Flute Voice; Tremolo (Fast): Speed; Chorus: Slow, Stop
	Symphonic/Celeste	Upper, Lead, Lower, Pedal; Mode: Symphonic/Celeste
	Vibrato	Upper, Lower, Lead: Preset/User (Delay, Depth, Speed); Touch Vibrato
	Delay/Flanger	Upper, Lead, Lower, Pedal; Delay: Speed, Feedback, Balance; Flanger: Speed, Feedback, Depth
	Pitch Bend	On/Off: Upper 1, 2, Lead; Mode: Narrow/Wide
	Lead Slide	On/Knee/Off; Time
	Panning	Upper, Lead, Lower, Pedal (7 positions)
	Dynamic Range Enhancer	Off, 1, 2, 3
	Feet	Upper, Lead, Lower, Pedal: Preset/4′/8′/16′
	Lead Tune	Tune Control
	Glide	Upper 1, 2, Lower 1, 2, Lead: Time
RHYTHM	Rhythms	March 1, 2, 3, Polka 1, 2, Country 1, 2, Broadway, Baroque; Waltz 1, 2, 3, 4, 5, Jazz Waltz 1, 2, 3, Bolero; Swing 1, 2, 3, 4, 5, 6, Jazz Ballad, Dixieland 1, 2; Bounce 1, 2, 3, Reggae 1, 2; Slow Rock 1, 2, 3; 8 Beat 1, 2, 3, 4, 5, Dance Pop 1, 2, 3, 4; Tango 1, 2, 3; Mambo, Salsa, Chacha, Rhumba, Beguine; Samba 1, 2, 3, Bossanova 1, 2, 3; 16 Beat 1, 2, 3, 4, 5, Funk 1, 2, 3; User 1-8 (A-D); (12 Buttons; 66 Rhythms); Volume Fine
	Variations	Fill-In; Intro. Ending; Lead In; Auto Variation: On/Off
	Others	Start; Synchro Start; Tempo; Bar/Beat LED; Volume; Balance
RHYTHM PROGRAM	Pattern Program	On/Off; Step Write/Real Time Write; Beat (4/4, 3/4, 2/4); Quantize (♩ ♫ ♬ ♬ 𝅘𝅥𝅯𝅘𝅥𝅯 𝅘𝅥𝅯𝅘𝅥𝅯𝅘𝅥𝅯 𝅘𝅥𝅯𝅘𝅥𝅯𝅘𝅥𝅯 Off); Metronome (On/Off); Edit: Instruments 1-16 (Change, Clear; Cursor); Accent Level 0-8; 75 Percussion Sounds; Accompaniment Select; Save: User 1-8 (A-D, Fill-In); Remaining Memory Display
	Rhythm Sequence	On/Off; Sequence 1-4; 120 Positions (Bar); Cursor Controls; Data: Preset/User (Set, Insert, Delete, Clear)
KEYBOARD PERCUSSION		On/Off: Lower, Pedal; 43 Sounds
ACCOMPANIMENT	Auto Bass Chord	Mode: Off; Single Finger; Fingered Chord; Custom ABC; Memory: Lower/Pedal
	Accompaniments	Type 1, 2, 3, 4, All Off
REGISTRATION MEMORY		M/To Disk, 1 ~ 16; Disable Button; Mode: Off; Shift; Jump; User (80 Positions; Cursor Controls; Data: Set, Insert, Delete, Clear)
BASIC REGISTRATION		1 ~ 5
REGISTRATION MENU		80 (Provided in the Included Disk)
MUSIC DISK RECORDER		Play/Record: Upper, Lower, Pedal, Lead, Keyboard Percussion, Control; Pause; Stop; Song Select; Song Repeat; Song Delete; Song Copy: From/To; Tempo; Shift; Format; Custom Play; Remaining Memory; LED Display; Eject
FOOT SWITCH		[Left] Mode: Off; Rhythm (Stop, Ending, Fill-In); Glide (Upper/Lower 1, 2, Lead; Time); Tremolo (On/Off); [Right] Regist.Shift Mode: Off, Shift, Jump, User
KNEE LEVER		On/Off: Sustain (Upper, Lower); MOC; Lead Slide
2ND EXP. PEDAL		Pitch Bend (On/Off: Upper 1, 2, Lead; Mode: Narrow, Wide); Tempo (Mode: Narrow, Wide)
LCD DISPLAY		256×64 (Large) Full Dot
OTHER CONTROLS		Power On/Off; Exp. Pedal (Depth); Pitch Control; Transpose; Master Volume; Display Select; Data Controls; Page; Coarse; Hold; LCD Contrast; LCD Brightness; MIDI (Output: Upper/Lower; Int./Ext.: Lead, Sync., Exp.)
OTHER FITTINGS		Registration Menu Disk; 3.5″ Floppy Disk; Matching Bench; Keyboard Cover/Music Stand; MIDI In/Out; Headphone Jack; Rhythm In (Phone; R/L);Aux Out (Phone; R/L);Aux In/Out (RCA; R/L); Mic; Mic. Volume
OPTIONAL ACCESSORIES		Voice Disks; Registration Menu Disk; YHE-5 Headphones; 3.5″ Floppy Disks
SOUND SYSTEM	Power Amplifier	210W (35W×6)
	Speakers	20cm(7 7/8″)×2; 18cm(7 1/8″)×2; 5cm(2″)×2; Monitor×2
DIMENSIONS	Width×Depth×Height	114.9cm×55.6cm×98.0cm* (45″×21 7/8″×38 3/5″) *With Keyboard Cover Closed
WEIGHT		96.5kg (212 3/4 lbs.)
FINISH		Simulated Mahogany Grain

		EL-70
KEYBOARD	Keyboards Touch Tone	Upper: 49 keys ($C_2 \sim C_6$), Lower: 49 keys ($C_1 \sim C_5$), Pedal: 20 keys ($C_0 \sim G_1$) Touch Tone (Initial/After; Upper, Lead, Lower)
VOICE	Tone Generation	New AWM & FM
	Upper/Lower Keyboard (Upper Keyboard Voice 1, 2 Lower Keyboard Voice 1, 2)	Strings 1, 2, 3, Pizz. Strings, Tremolo Strings, Synth. Strings; Organ, Jazz Organ 1, 2, Pop Organ, Theatre Organ, Accordion, Bandoneon; Brass 1, 2, 3, Synth. Brass; Piano, Elec. Piano 1, 2, Harpsichord; Clarinet; Guitar 1, 2, 3, Banjo, Mandolin, Elec. Guitar, Harp; Saxophone, Soprano Sax.; Vibraphone, Glockenspiel, Marimba, Xylophone, Chime, Synth. Chime, Chorus 1, 2; Cosmic 1, 2, 3, 4, 5, 6; Tutti 1, 2, 3, 4; [Upper] Harmonica; [Lower] Horn 1, 2; User 1-16; (56 Buttons/52 Voices) Volume Fine; Brilliance
	Lead (Upper) (Lead Voice)	Violin 1, 2, Cello; Oboe, English Horn, Bassoon; Flute, Piccolo, Recorder, Whistle; Trumpet 1, 2, Muted Trumpet, Trombone, Flugel Horn; User 1-16; To Lower; (6 Buttons/15 Voices) Volume Fine; Brilliance
	Pedalboard (Pedalboard Voice)	Contra Bass, Pizz. Bass, Upright Bass; Organ Bass 1, 2, 3; Elec. Bass 1, 2, Synth. Bass 1, 2; Tuba, Timpani; User 1-16; To Lower; (6 Buttons/12 Voices) Volume Fine; Brilliance
	Voice Display	Upper, Lower, Lead, Pedal; Manual Balance
	Upper Flute Voice Lower Flute Voice	Flute Voices (16′, 8′, $5\frac{1}{3}$′, 4′, $2\frac{2}{3}$′, 2′, $1\frac{3}{5}$′, 1′); Attack (4′, $2\frac{2}{3}$′, 2′; Length; Mode Each, First); Click; Response; Tremolo On/Off; Volume; 8 Presets; 8 User Voices; On/Off Controls : Upper, Lower
VOICE EDIT		On/Off; Operator 1, 2, 3, 4: (Output Level, Attack Rate, Decay 1 Rate, Decay 1 Level, Decay 2 Rate, Release Rate); AWM: (Output Level, Cutoff, Resonance); Operator Selectors; Operator On/Off Buttons; Save: User: 1-16; (From) Voice Disk
MELODY ON CHORD		Mode: Off, 1, 2, 3; Knee: On/Off
EFFECT/ CONDITION	Digital Reverb	3 Types: Room, Hall, Church; Length; Depth; On/Off; Upper/Lower 1, 2, Flute Voice, Lead, Pedal, Accompaniment, Percussion, Tremolo, Symphonic, Delay, Flanger
	Sustain	Upper (Knee), Lower (Knee), Pedal: Length
	Brilliance	Upper, Lead, Lower, Pedal: Control (Brilliant↔Mellow)
	Tremolo/Chorus	Upper, Lead, Lower, Pedal, Flute Voice; Tremolo (Fast): Speed; Chorus: Slow, Stop
	Symphonic/Celeste	Upper, Lead, Lower, Pedal; Mode: Symphonic/Celeste
	Vibrato	Upper, Lower, Lead: Preset/User (Delay, Depth, Speed); Touch Vibrato
	Delay/Flanger	Lead, Upper/Lower Voice 1; Delay: Speed, Feedback, Balance; Flanger: Speed, Feedback, Depth
	Pitch Bend	—
	Lead Slide	On/Knee/Off
	Panning	Upper, Lead, Lower, Pedal (7 positions)
	Dynamic Range Enhancer	—
	Feet	Upper, Lead, Lower, Pedal: Preset/4′/8′/16′
	Lead Tune	—
	Glide	Upper 1, 2, Lower 1, 2, Lead
RHYTHM	Rhythms	March 1, 2, 3, Polka 1, 2, Country 1, 2, Broadway, Baroque; Waltz 1, 2, 3, 4, 5, Jazz Waltz 1, 2, 3, Bolero; Swing 1, 2, 3, 4, 5, 6, Jazz Ballad, Dixieland 1, 2; Bounce 1, 2, 3, Reggae 1, 2; Slow Rock 1, 2, 3; 8 Beat 1, 2, 3, 4, 5, Dance Pop 1, 2, 3, 4; Tango 1, 2, 3; Mambo, Salsa, Chacha, Rhumba, Beguine; Samba 1, 2, 3, Bossanova 1, 2, 3; 16 Beat 1, 2, 3, 4, 5, Funk 1, 2, 3; User 1-8 (A-D); (12 Buttons; 66 Rhythms); Volume Fine
	Variations	Fill-In; Intro. Ending; Lead In; Auto Variation: On/Off
	Others	Start; Synchro Start; Tempo; Bar/Beat LED; Volume; Balance
RHYTHM PROGRAM	Pattern Program	On/Off; Step Write/Real Time Write; Beat ($\frac{4}{4}$, $\frac{3}{4}$, $\frac{2}{4}$); Quantize (♩.♫.♬.♬.♫.♫.♬ off); Metronome (On/Off); Edit: Instruments 1-16 (Change, Clear; Cursor); Accent Level 0-8; 75 Percussion Sounds; Accompaniment Select; Save: User 1-8 (A-D, Fill-In); Remaining Memory Display
	Rhythm Sequence	On/Off; Sequence 1-4; 120 Positions (Bar); Cursor Controls; Data: Preset/User (Set, Insert, Delete, Clear)
KEYBOARD PERCUSSION		On/Off: Lower, Pedal; 43 Sounds
ACCOMPANIMENT	Auto Bass Chord	Mode: Off; Single Finger; Fingered Chord; Custom ABC; Memory: Lower/Pedal
	Accompaniments	Type 1, 2, 3, 4, All Off
REGISTRATION MEMORY		M/To Disk, 1 ~ 8; Disable Button; Mode: Off; Shift; Jump; User (80 Positions; Cursor Controls; Data: Set, Insert, Delete, Clear)
BASIC REGISTRATION		1 ~ 5
REGISTRATION MENU		80 (Provided in the Included Disk)
MUSIC DISK RECORDER		Play/Record: Upper, Lower, Pedal, Lead, Keyboard Percussion, Control; Pause; Stop; Song Select; Song Repeat; Song Delete; Song Copy: From/To; Tempo; Shift; Format; Custom Play; Remaing Memory; LED Display; Eject
FOOT SWITCH		[Left] Mode: Off; Rhythm (Stop, Ending, Fill-In); Glide (Upper/Lower 1, 2; Lead); Tremolo (On/Off); [Right] Regist.Shift Mode: Off, Shift, Jump, User
KNEE LEVER		On/Off: Sustain (Upper, Lower); MOC; Lead Slide
2ND EXP. PEDAL		—
LCD DISPLAY		256×64 Full Dot
OTHER CONTROLS		Power On/Off; Exp. Pedal (Depth); Pitch Control; Transpose; Master Volume; Display Select; Data Controls; Page; Coarse; Hold; LCD Contrast; LCD Brightness; MIDI (Output: Upper, Lower; Int./Ext.: Lead, Sync., Exp.)
OTHER FITTINGS		Registration Menu Disk; 3.5″ Floppy Disk; Matching Bench; Keyboard Cover/Music Stand; MIDI In/Out; Headphone Jack; Rhythm In (Phone; R/L); Aux In/Out (RCA; R/L)
OPTIONAL ACCESSORIES		Voice Disks; Registration Menu Disk; YHE-5 Headphones; 3.5″ Floppy Disks
SOUND SYSTEM	Power Amplifier	200W (50W×4)
	Speakers	20cm ($7\frac{7}{8}$″)×2; 5cm (2″)×2; Monitor×2
DIMENSIONS	Width×Depth×Height	114.9cm×55.6cm×98.0cm* (45″×21 $\frac{7}{8}$″×38 $\frac{3}{5}$″) *With Keyboard Cover Closed
WEIGHT		89.0kg (196 $\frac{1}{5}$ lbs.)
FINISH		Simulated Mahogany Grain

■PANEL LAYOUT

EL-90

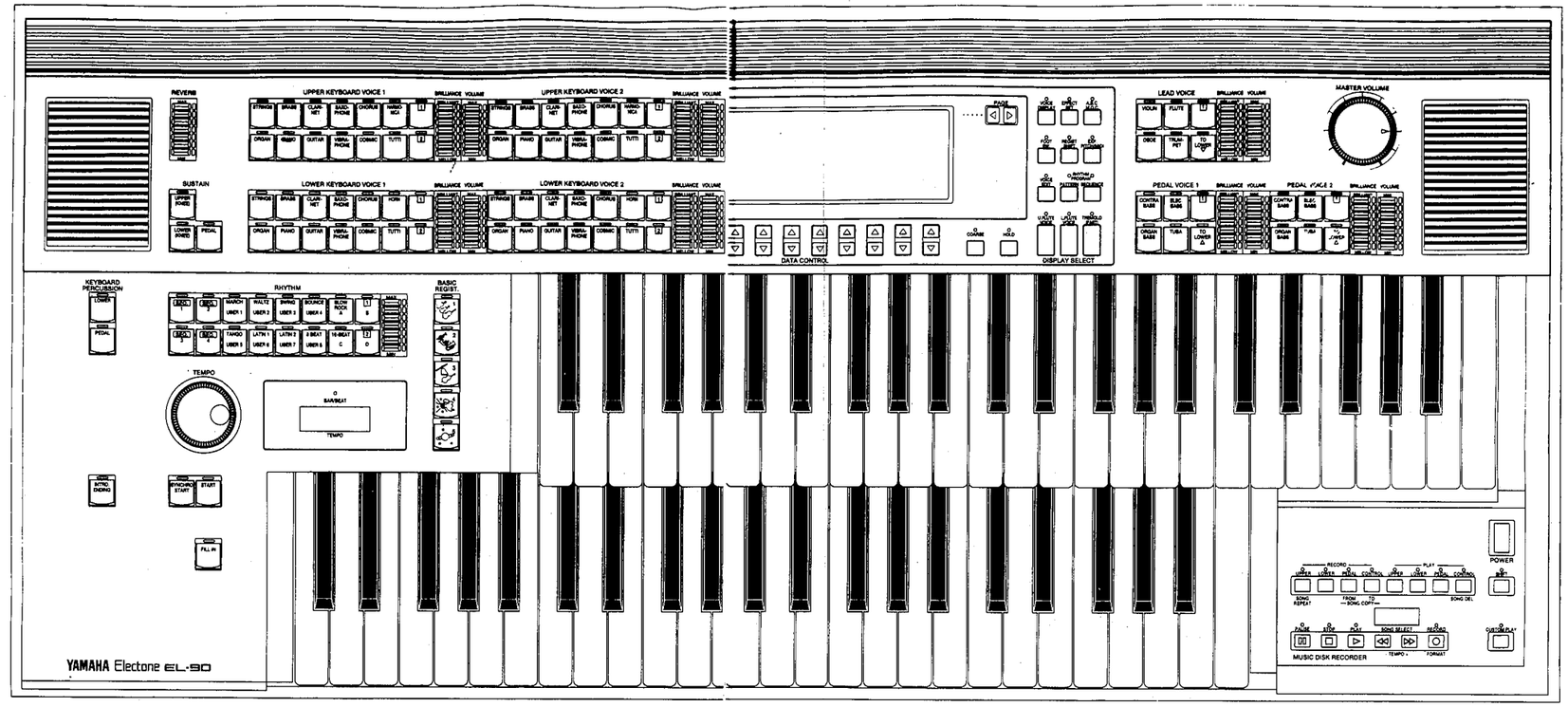

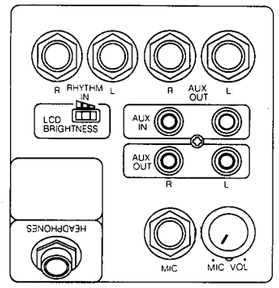

EL-70

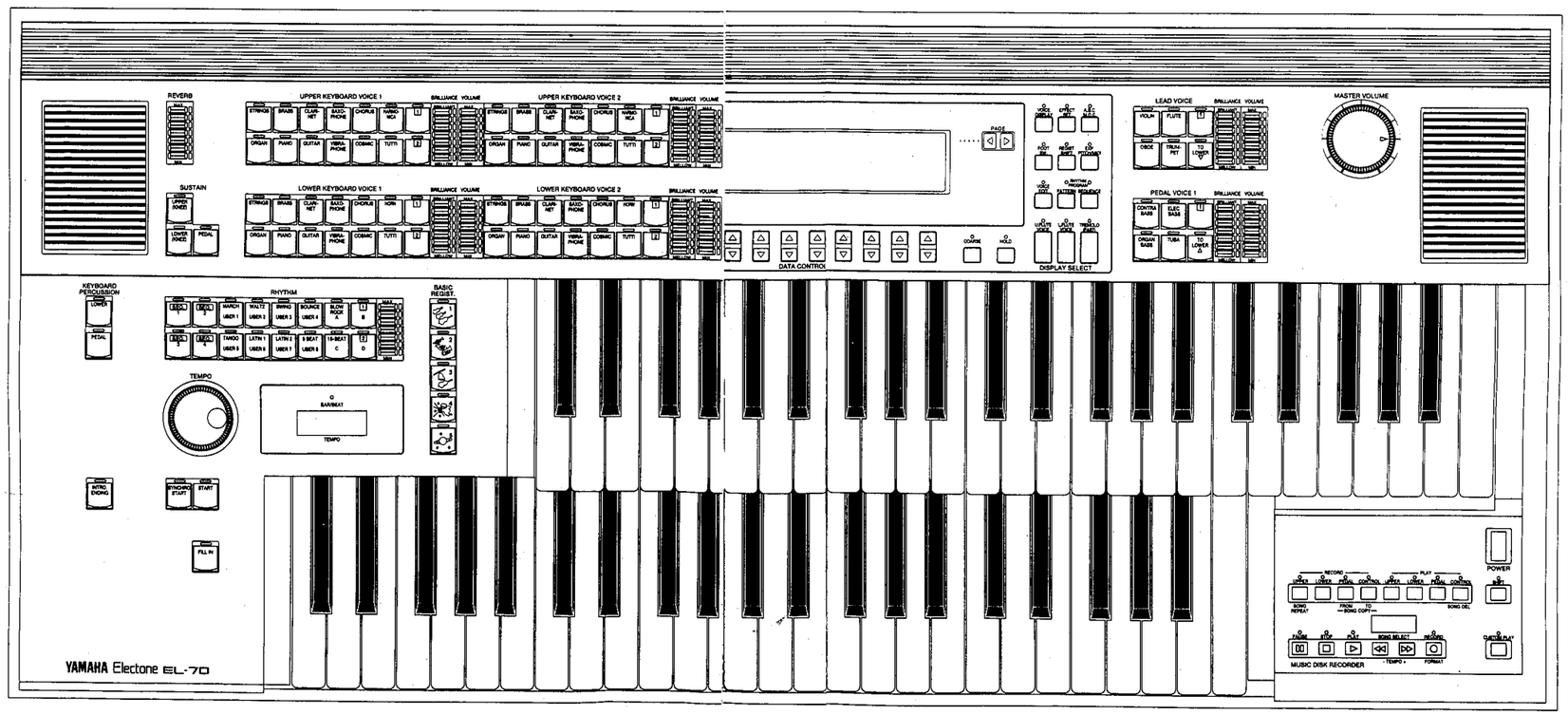

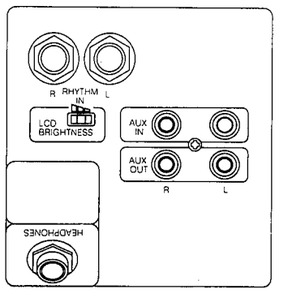

EL-90/EL-70

■ CIRCUIT BOARD LAYOUT

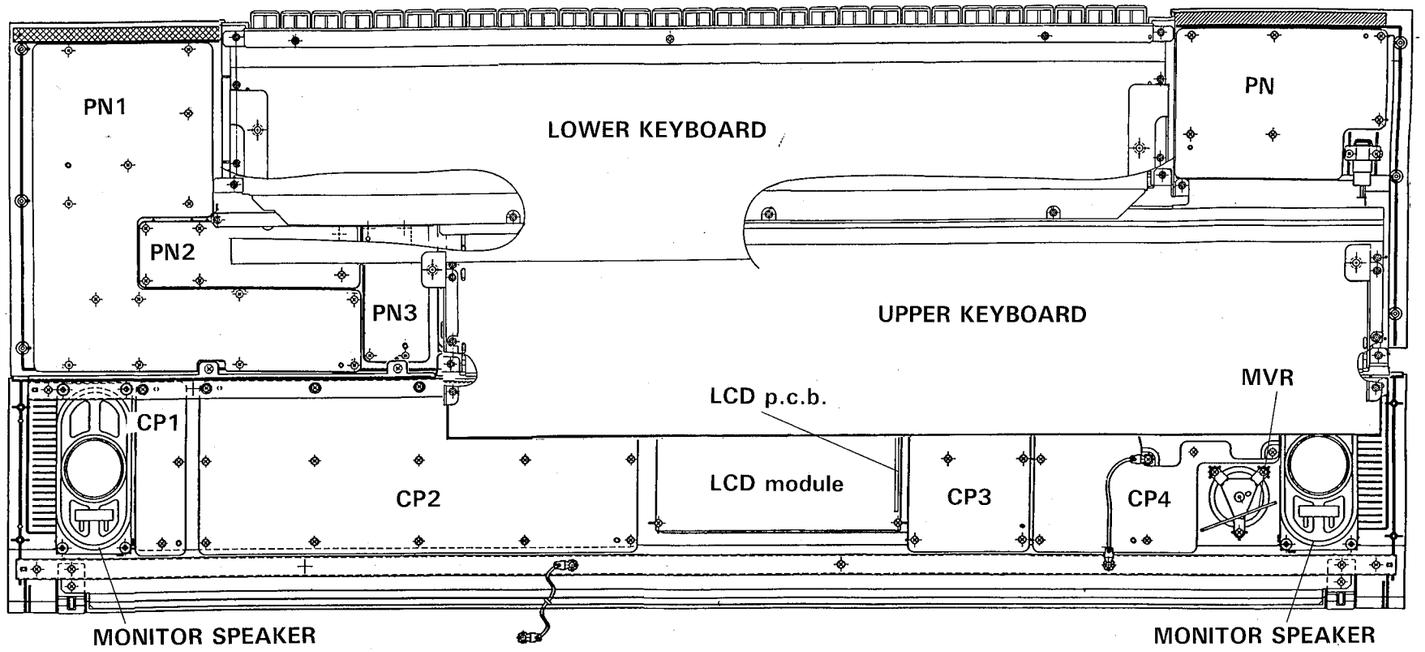

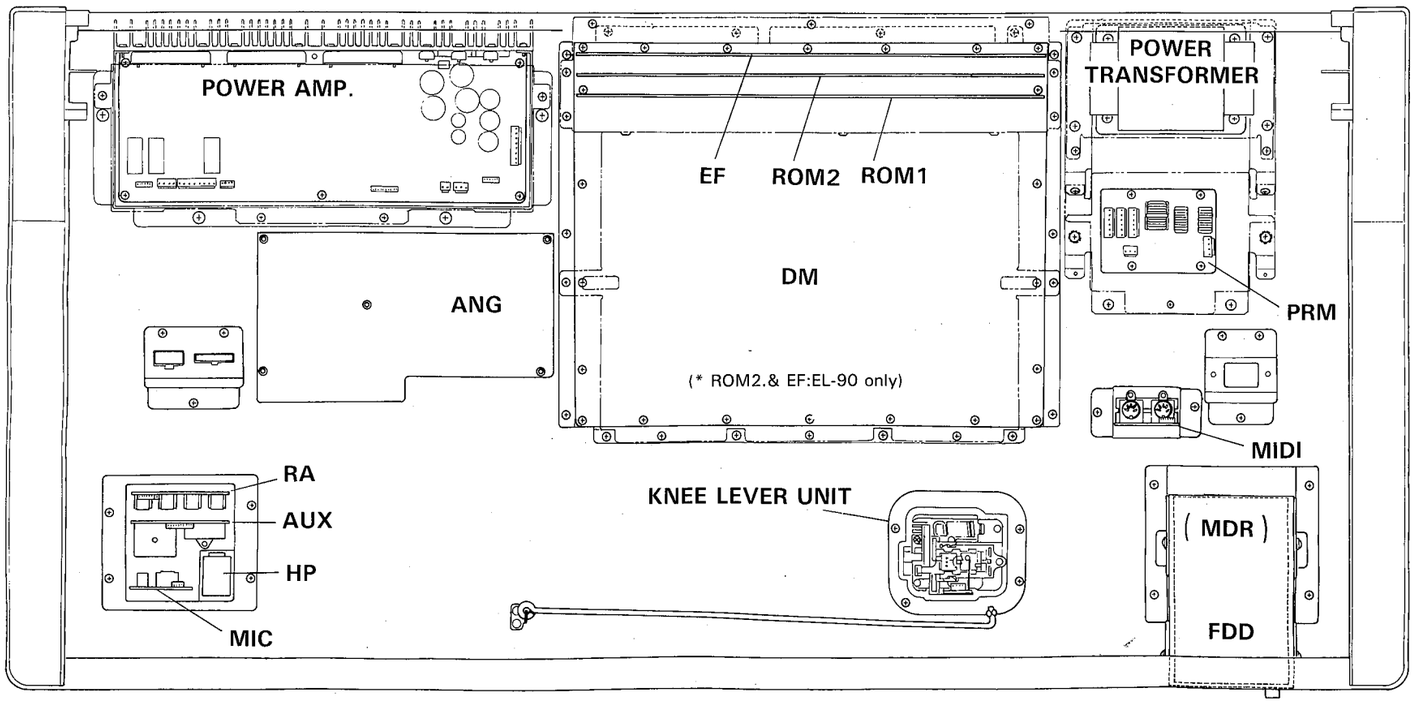

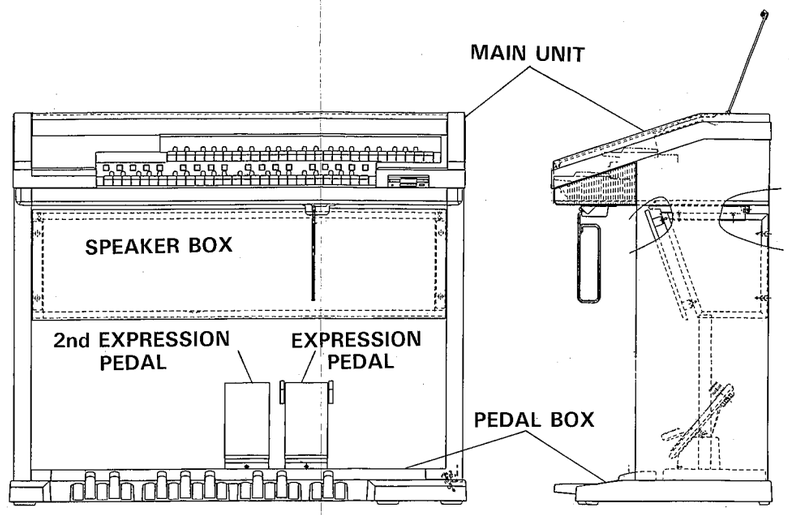

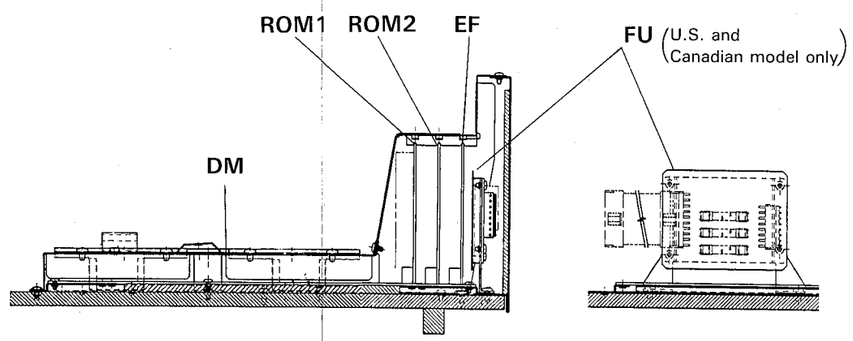

●EL90

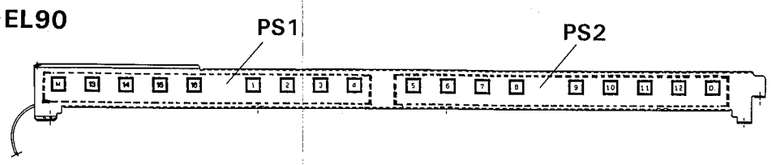

●EL70

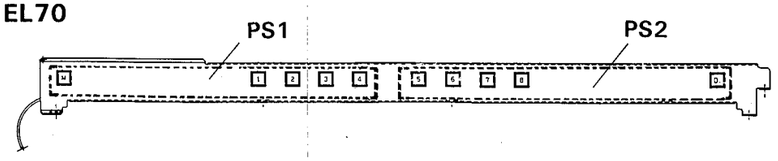

■REGISTRATION MENU LIST

Note: The Registration Menu provides a total of 80 different registration settings, which include voice assignments for each keyboard, effect settings, rhythm/accompaniment patterns, and so on. The Classic and Organ Registration Menus, however, may not include rhythm/accompaniment patterns.

Classic: Page 1

STYLE STIL STYLE	LCD DISPLAY LCD-ANZEIGE ECRAN	RHYTHM RHYTHMUS RYTHME	TEMPO TEMPO TEMPO	FEATURED VOICE(S) VERWENDETE STIMME(-N) VOIX	SONG EXAMPLES	TITEL DER BEISPIELE	EXEMPLES DE PIECE MUSICALE
1 String Ensemble	Strgs Ens.			Strings	Serenade, C major, str. orch., op 48 (Tchaikovsky) Symphony No. 40 (Mozart)	Symphonie Nr. 40 (Mozart)	Serenade pour cordes en do Majeur op 48 (Tchaikovsky) Symphonie No 40 (Mozart)
2 Pizzicato Ensemble	Pizz. Ens.			Pizzicato Strings	Pizzicato Polka (J. Strauss)		
3 Orchestra 1	Orchestra 1			Strings, Brass & Timpani Roll	The mastersingers of Nuremberg (Wagner)	Meistersinger von Nürnberg (Wagner)	Les maitres chanteurs de Noremberg (Wagner)
4 Orchestra 2	Orchestra 2			Wood winds & Strings	The marriage of Figaro (Mozart)	Die Hochzeit des Figgaro (Mozart)	Les noces de Figaro (Mozart)
5 Flute & Harp	Flute/Harp			Flute & Harp	Sicilienne (Fauré) Menuet, L'Arlésienne (Bizet)		Sicilienne (Fauré) Menuet de l'Arlésienne (Bizet)
6 Oboe & Strings	Oboe/Strgs			Oboe & Tremolo String	The Swan Lake (Tchaikovsky) Polovtsian dances (Borodin)	Polowezkischer Tanz (Borodin)	Le lac des cygnes (Tchaikovsky) Danse polovstienne (Borodin)
7 Strings Quartet	Strgs Quart			Violin & Cello	Serenade (Haydn) Eine kleine Nachtmusik (Mozart)	Serenade (Haydn) Eine kleine Nachtmusik (Mozart)	La petite musique de nuit (Mozart)
8 Wood Winds Ensemble	Wood Winds			Oboe, Flute & Bassoon	Happy birthday to you Four Swans, The Swan Lake		Joyeux anniversaire 4 cygnes, Le lac des cygnes
9 Piano & Strings	Piano/Strg			Piano & Strings	Piano Concerto (Mozart)	Klavier Konzert (Mozart)	Concerto pour piano (Mozart)
10 Sugar-plum Fairy	Sugar-plum			Celesta & Pizzicato	Dance of the sugar-plum fairy (Tchaikovsky)		Danse da la fée dragee (Tchaikovsky)
11 Choir Ensemble	Choir Ens.			Chorus	Swanee River (Foster) Sacred songs		Chants sacrés
12 Fanfare	Fanfare			Brass & Keyboard Percussion	Super man Olympic fanfare	Olympische Fanfare	Fanfare Olympic
13 Baroque	Baroque	Baroque	♩=76	Oboe	Canon (Pachelbel) Ave Maria (Gounod)	Kanon (Pachelbel) Ave Maria (Gounod)	Canon de Pachelbel Ave Maria de Gounod
14 Vienna Waltz	Wien. Waltz	Waltz 2	♩=190	Piccolo & Strings	Story of the Vienna forest (J. Strauss) Spring feeling (J. Strauss)	G'schichten aus dem Wienerwald, op. 325 (J. Strauss) Frühlingsstimmen (J. Strauss)	l'Histoire de la forêt Viennoise (J. Strauss) Les voix du printemps (J. Strauss)
15 March 1	March 1	March 1	♩=123	Brass	The Star & Stripes forever Under the double eagle march (Wagner)	Unter dem Doppel-Adler (Wagner)	Sous la marche des deux aigles (Wagner)
16 March 2	March 2	March 3	♩=128	Trombone	The Washington post El capitán		Le capitaine

Jazz/Contemporary: Page 2

STYLE STIL STYLE	LCD DISPLAY LCD-ANZEIGE ECRAN	RHYTHM RHYTHMUS RYTHME	TEMPO TEMPO TEMPO	FEATURED VOICE(S) VERWENDETE STIMME(-N) VOIX	SONG EXAMPLES	TITEL DER BEISPIELE	EXEMPLES DE PIECE MUSICALE
17 Big Band 1	Big Band 1	Swing 1	♩=182	Brass	Take the A train Just friends		
18 Big Band 2	Big Band 2	Swing 2	♩=138	Sax Ensemble	A string of pearls		
19 Big Band 3	Big Band 3	Bounce 2	♩=144	Muted Trumpet	Get out and get under the moon My blue heaven		
20 Big Band 4	Big Band 4	Bounce 2	♩=84	Clarinet	Moonlight serenade		
21 Jazz Combo 1	Combo 1	Swing 3	♩=196	Muted Trumpet & Tenor Sax	Straight no chaser C Jam blues		
22 Jazz Combo 2	Combo 2	Swing 6	♩=196	Flute	Green dolphin street Love for sale		
23 Jazz Waltz	Jazz Waltz	Jazz Waltz	♩=168	Whistle & Guitar	Bluesette		
24 Jazz Ballad	Ballad	Jazz Ballad	♩=60	Tenor Sax	Misty What's new		
25 Dixieland 1	Dixie 1	Dixie 1	♩=108	Trumpet	Alexander ragtime band Tiger rag		
26 Dixieland 2	Dixie 2	Dixie 2	♩=96	Honky Tonk Piano	12th street rag The easy winners		
27 Euro. Beat	Euro. Beat	Dance Pop 2	♩=120	*Synth. Clarinet (Clarinet)	Toy boy		
28 Dance Pop	Dance Pop	Dance Pop 3	♩=120	*Synth. Brass (Cosmic)	Open your heart		
29 Crossover 1	Crossover 1	16 Beat 1	♩=85	Soprano Sax	We are all alone Tomorrow		
30 Crossover 2	Crossover 2	Samba 3	♩=106	Guitar	Captain carib		
31 Crossover 3	Crossover 3	16 Beat 5	♩=95	Whistle & Vibraphone	Mornin'		
32 Funk	Funk	Funk 1	♩=118	Synth. Brass	Do I do From the Wiz		

*EL-90 (EL-70)

Latin: Page 3

STYLE STIL STYLE	LCD DISPLAY LCD-ANZEIGE ECRAN	RHYTHM RHYTHMUS RYTHME	TEMPO TEMPO TEMPO	FEATURED VOICE(S) VERWENDETE STIMME(-N) VOIX	SONG EXAMPLES	TITEL DER BEISPIELE	EXEMPLES DE PIECE MUSICALE
33 Samba 1	Samba 1	Samba 2	♩=110	Marimba & Flute	Samba de Orfeu Copacabana		Samba d'orphée
34 Samba 2	Samba 2	Samba 1	♩=110	Piano	Brasil Tico tico		Brazil
35 Bossanova 1	Bossanova 1	Bossanova 1	♩=126	Saxophone	Wave This masquerade		
36 Bossanova 2	Bossanova 2	Bossanova 2	♩=130	Elec. Piano	The girl from Ipanema Agua de beber		La fille d'Ipanema
37 Bossanova 66	Bossa 66	Bossanova 3	♩=164	Piano	Mas que nada		
38 Salsa	Salsa	Salsa	♩=112	Flugelhorn	Conga Bitter sweet samba		
39 Mambo	Mambo	Mambo	♩=98	Saxophone	Mambo No. 5 Mambo jumbo		
40 Chacha	Cha-cha	Chacha	♩=132	Trumpet	Tea for two		
41 Rhumba	Rumba	Rhumba	♩=122	Trombone	Bésame mucho Miami beach rhumba		
42 Beguine	Beguine	Beguine	♩=118	Flute, Vibraphone & Strings	Begin the beguine Andalucia		Andalousie
43 Tango 1 (Argentine)	Tango 1	Tango 1	♩=120	Bandoneon	Kiss of fire Caminito		Baiser de feu
44 Tango 2 (Continental)	Tango 2	Tango 2	♩=120	Strings	The song of pearl fisher Blue tango		Chanson de pêcheur de perles Tango bleu
45 Tango 3 (Milonga)	Tango 3	Tango 3	♩=108	Bandoneon & Violin	La puñalada Taquito Militar		
46 Bolero	Bolero	Bolero	♩=132	Trumpet	Granada Malagueña		
47 Caribbean 1	Carib 1	Reggae 1	♩=132	*Steel Drum (Marimba)	Bananaboat song Survival		
48 Caribbean 2	Carib 2	Reggae 2	♩=120	Jazz Organ	Master blaster		

*EL-90 (EL-70)

Pops/Folk: Page 4

STYLE STIL STYLE	LCD DISPLAY LCD-ANZEIGE ECRAN	RHYTHM RHYTHMUS RYTHME	TEMPO TEMPO TEMPO	FEATURED VOICE(S) VERWENDETE STIMME(-N) VOIX	SONG EXAMPLES	TITEL DER BEISPIELE	EXEMPLES DE PIECE MUSICALE
49 Pops Orchestra 1	Pops Orch 1	8 Beat 1	♩=82	Strings	Sun flower The way we were		
50 Pops Orchestra 2	Pops Orch 2	Slow Rock 1	♩=80	Saxophone	The end of the world Can't help falling in love		
51 Rock'n'Roll	Rock & Roll	8 Beat 3	♩=160	Saxophone & Trumpet	Oh! Carol Rock and roll music		
52 60's Pop	60's Pop	Slow Rock 2	♩=74	Elec. Guitar	Where the boys are Blue Hawaii		
53 Hard Rock 1	Hard Rock 1	8 Beat 4	♩=135	*Distortion Guitar (Saxophone)	Get back		
54 Hard Rock 2	Hard Rock 2	Bounce 3	♩=126	Cosmic	Black night Higher Ground		
55 Musical 1	Musical 1	Broadway	♩=132	Xylophone	There's no business like show business		
56 Musical 2	Musical 2	8 Beat 5	♩=72	Trombone	When you wish upon a star		
57 Popular Standard 1	Standard 1	Waltz 1	♩=106	Violin & Strings	Fascination La-la-lu		
58 Popular Standard 2	Standard 2	Jazz Waltz 2	♩=96	Flute & Vibraphone	Last waltz Someday my prince will come		
59 Bounce	Bounce	Bounce 1	♩=136	Whistle	Les champs-elysees Get out and get under the moon		Les champs-elysees
60 Waltz-Folk	Waltz-Folk	Waltz 5	♩=127	Pan Flute	Green sleeves Fina estampa		
61 Polka	Polka	Polka 1	♩=123	Accordion	Oh Vreneli Draw water joyfully (Oshavtem mayim)		
62 German Waltz	Germ. Waltz	Waltz 4	♩=197	Trumpet	Snow waltz Trink, trink, Brüderlein, trink	Schnee walzer Trink, trink, Brüderlein, trink	
63 Country 1	Country 1	Country 1	♩=120	Harmonica	Oh, bury me not on the lone prairie The five pennies		
64 Country 2	Country 2	Country 2	♩=110	Banjo & Violin	Oh Susanna Camp race		

*EL-90 (EL-70)

Organ: Page 5

STYLE STIL STYLE	LCD DISPLAY LCD-ANZEIGE ECRAN	RHYTHM RHYTHMUS RYTHME	TEMPO TEMPO TEMPO	FEATURED VOICE(S) VERWENDETE STIMME(-N) VOIX	SONG EXAMPLES	TITEL DER BEISPIELE	EXEMPLES DE PIECE MUSICALE
65 Classic Organ 1	Classic 1				Wedding march (Mendelssohn) Gothic suite op. 25-I	Hochzeits marsch (Mendelssohn)	Marche nuptiale (Mendelssohn) Suite gothique op 25-I
66 Classic Organ 2	Classic 2				Toccata in D minor BWV565 Wedding march (Wagner)	Hochzeits marsch (Wagner)	Toccata en re mineur BWV 565 Marche nuptiale (Wagner)
67 Classic Organ 3	Classic 3				Silent night Vater unser Himmelreich	Stille Nacht, heilige Nacht Vater unser Himmelreich	Douce nuit
68 Classic Organ 4	Classic 4				Fugue in Gm Jesus bleibet meine Freude	Fuge in Gm Jesus bleibet meine Freude	Fugue en sol mineur Jesus que ma joie demeure (Bach)
69 Classic Organ 5	Classic 5				Sheep may safely graze Choral No. 1 in E		Choral No 1 en mi
70 Barrel Organ	Barrel				Upper=Roller Organ, Carousel Organ Lower=Serinette		Superieur=Limonaire, Caroussel Inferieur=Serinette
71 Theatre Organ 1	Theatre 1				My romance Love is a many-splendored thing		
72 Theatre Organ 2	Theatre 2				Start of somethin' big I could have a dance all night	Ich hab' gelanzt heut' Nacht	J'aiviis voulu dancer
73 Theatre Organ 3	Theatre 3				As long as he needs me Alley cat		
74 Theatre Organ 4	Theatre 4				Starlight serenade Try to remember		
75 Jazz Organ 1	Jazz 1	Swing 3	♩=150		Satin doll Softly, as in a morning sunrise		
76 Jazz Organ 2	Jazz 2	Swing 6	♩=210		A night in Tunisia The cat		
77 Jazz Organ 3	Jazz 3	Swing 1	♩=80		What's new Here's that rainy day		
78 Jazz Organ 4	Jazz 4	Bossanova 2	♩=180		Summer samba Days of wine and roses		
79 Pop Organ 1	Pop 1	Jazz Ballad	♩=68		Ebb tide I left my heart in San Francisco		
80 Pop Organ 2	Pop 2	8 Beat 3	♩=65		A whiter shade of pale Yesterday		

VL71760 Printed in Japan

KEYBOARD PERCUSSION ASSIGNMENTS

Percussion Assignments for the Lower Keyboard

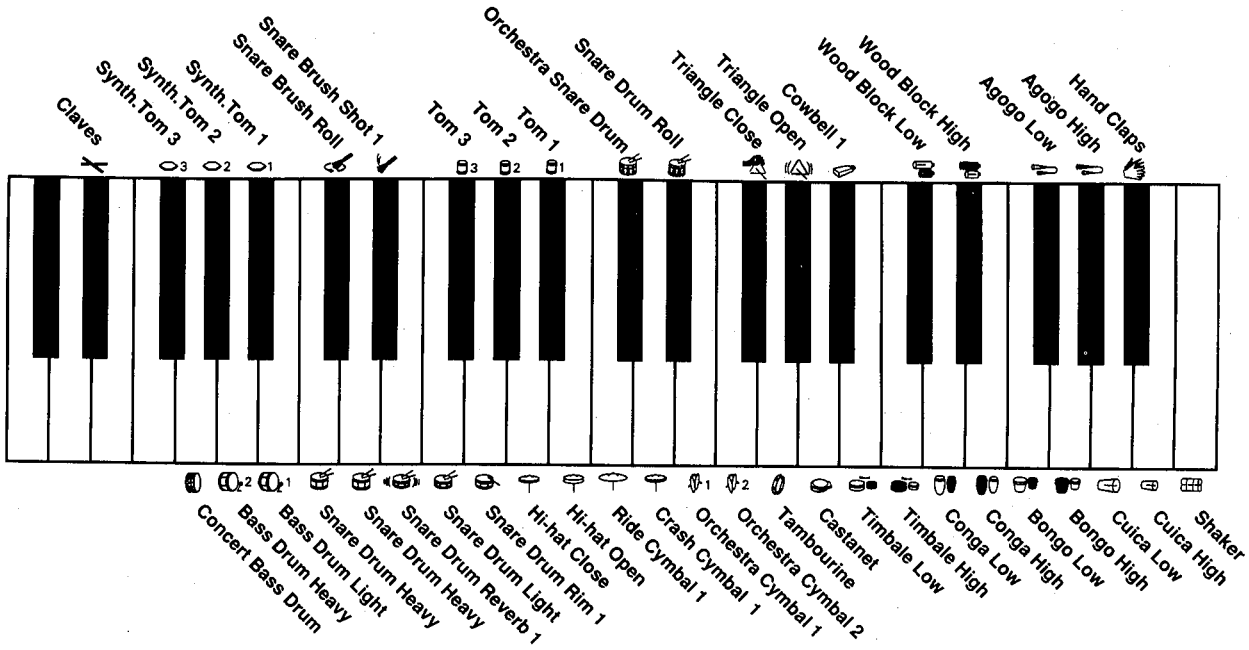

Percussion Assignments for the Pedalboard

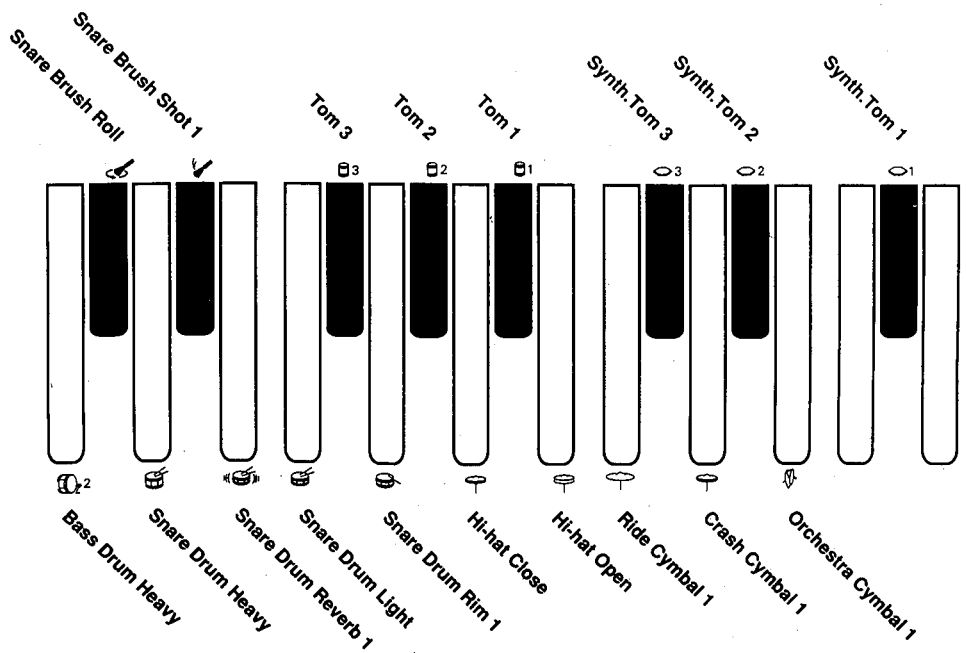

■RHYTHM PROGRAMMING PERCUSSION SOUNDS

— Upper and Lower Keyboard

The Rhythm Programmer has a total of 75 different percussion sounds that are assigned to the keys of the Upper and Lower keyboards, as shown in the following chart.

Note: Percussion sounds on the Lower keyboard are the same as in Keyboard Percussion. The sounds of the Upper keyboard can be used only in Rhythm Pattern Programming.

Upper Keyboard

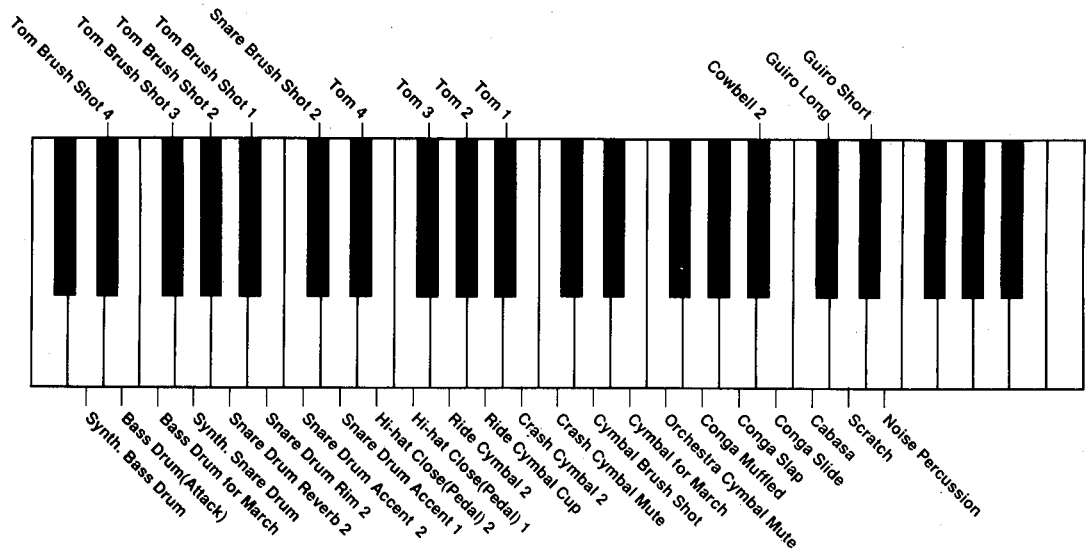

Lower Keyboard

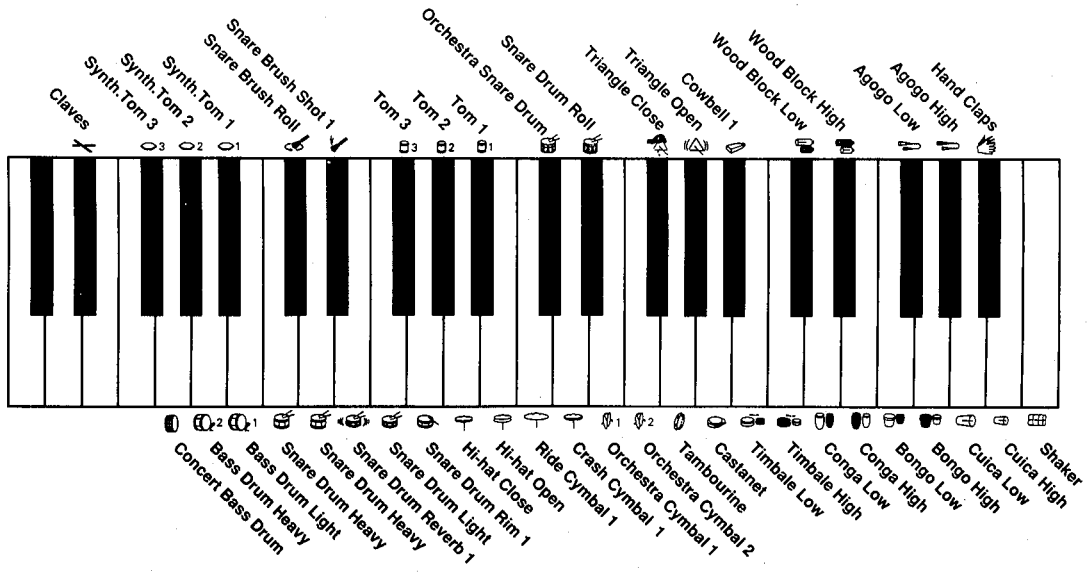

■MESSAGES ON THE MDR LED DISPLAY

Display	Description of the Messages
InSt	No disk is installed. Install a disk.
Fort	The installed disk is not formatted. Format the disk. (See page 57.)
Prot	1) The installed disk is write-protected, so the Record, Song Copy, and Song Delete jobs cannot be performed. Set the disk's Write Protect tab to the OFF position. (See page 56.) 2) If you are using a copy-protected playback-only disk, this message may appear when you attempt the Record, Song Copy, or Song Delete operations.
FULL	1) The disk's memory capacity is full, so the Record or Song Copy operation cannot be performed. Install another formatted disk. 2) Data is already recorded at all song numbers, so the Song Copy operation cannot be performed. Press the STOP button, then delete any unnecessary songs.
EPtY	None of the song numbers contain recorded data, so the Song Copy operation cannot be performed. Press the STOP button.
-out	An error occurred because the disk was removed during recording or playback. Replace the disk, press the STOP button, then start the operation over again.
dISc	The installed disk cannot be played back on the M.D.R. Press the STOP button, then insert a compatible disk.
LotS	Recording cannot be performed because too much data was received at once. Press the STOP button.
bAd	The disk is defective and cannot be formatted. Press the STOP button, then insert another disk.
Eror	An error occurred during the transmission or reception of data. Press the STOP button.
oooo	In the case of Voice Disk operation, an incompatible Voice Disk has been inserted.

■DISASSEMBLY PROCEDURE

1 OPENING THE PANEL ASSEMBLY
2 DM CIRCUIT BOARD REMOVAL
3 ROM1, ROM2 AND EF CIRCUIT BOARDS REMOVAL
4 ANG CIRCUIT BOARD REMOVAL
5 RA, AUX, MIC AND HP CIRCUIT BOARDS REMOVAL
6 MIDI CIRCUIT BOARD REMOVAL
7 FLOPPY DISK DRIVE AND MDR CIRCUIT BOARD REMOVAL
8 PRM CIRCUIT BOARD REMOVAL
9 POWER TRANSFORMER REMOVAL
10 POWER AMPLIFIER REMOVAL
11 KNEE LEVER UNIT REMOVAL
12 LOWER KEYBOARD ASSEMBLY REMOVAL
13 UPPER KEYBOARD ASSEMBLY REMOVAL
14 PN1 CIRCUIT BOARD REMOVAL
15 PN2 CIRCUIT BOARD REMOVAL
16 PN3 CIRCUIT BOARD REMOVAL
17 PN4 CIRCUIT BOARD REMOVAL
18 CP1 CIRCUIT BOARD REMOVAL
19 CP2, CP3 AND CP4 CIRCUIT BOARDS REMOVAL
20 MVR CIRCUIT BOARD REMOVAL
21 LCD CIRCUIT BOARD REMOVAL
22 POWER SWITCH REMOVAL
23 LEFT MONITOR SPEAKER REMOVAL
24 RIGHT MONITOR SPEAKER REMOVAL
25 PS1 AND PS2 CIRCUITS BOARD REMOVAL
26 EXPRESSION PEDALS REMOVAL
27 PEDAL KEYBOARD ASSEMBLY REMOVAL
28 AC CORD REMOVAL
29 MAIN UNIT REMOVAL
30 SPEAKER BOX REMOVAL

1 Opening The Panel Assembly

1-1 Remove the two (2) screws holding the top board at the back, marked ①in the figure, then the top board can be removed from the main unit.

1-2 Remove the four (4) screws holding the upper keyboard and lower keyboard, marked②, and three (3) screws holding the panel assembly, marked③. These screws are located on the under side of the main unit.

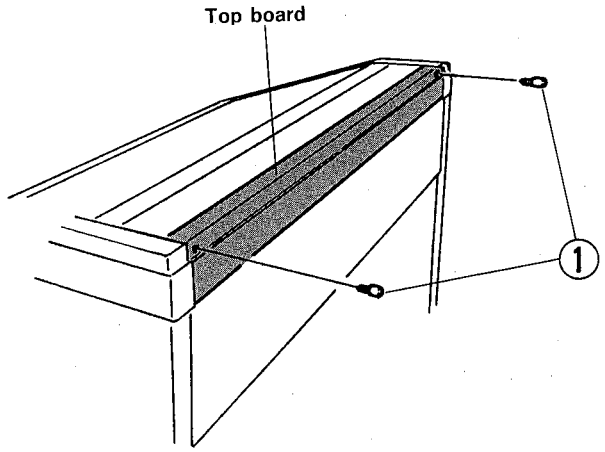

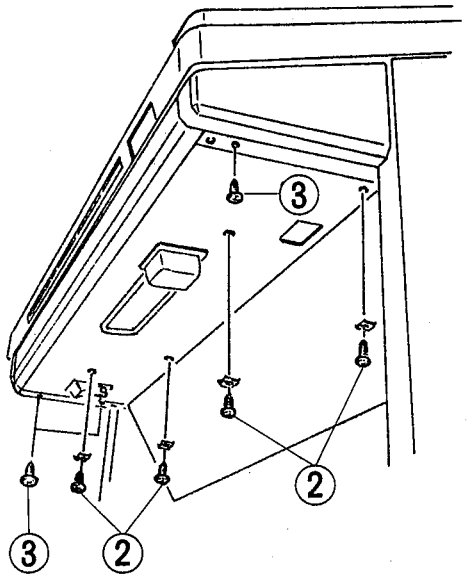

1-3 Lift the cover from the front and hold it vertical, (at 90 degrees), supporting it with your hand. Then use your other hand to open the panel assembly, holding the white keys of the lower keyboard (4 keys or more - for safety). Make sure not to raise the panel while the cover is completely open. (ie. until it rest back on the unit. This may cause damage to the cover.)

1-4 Use the stay which is provided with this unit. Insert the stay pin as shown in the illustration below. Make sure to insert the stay pin firmly in the hole located inside the upper keyboard.

* Securely attach the stay - MAKING SURE THAT IT CAN NOT COME OFF. Pay attention to the stay installation to avoid injury to you and to avoid damage to the unit. And be sure to fix the stay pin with clamps after operation.

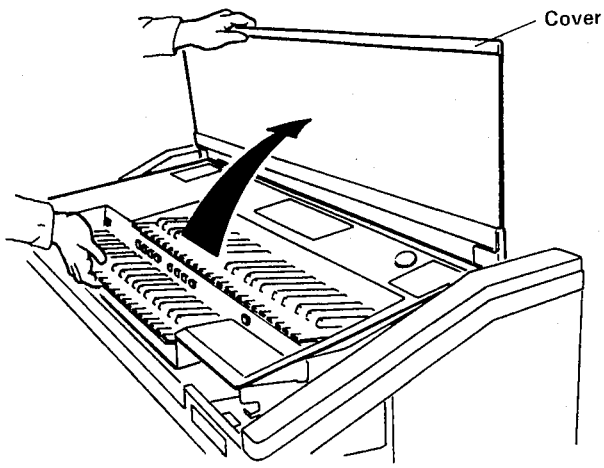

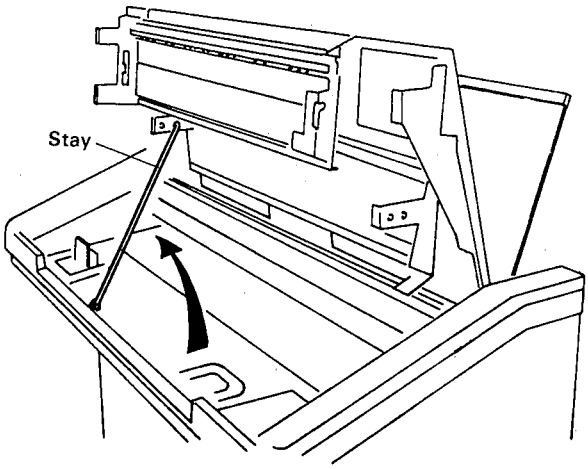

1-5 While holding the cover with your hand, lock the cover up by inserting a screw driver into the shaft unit hole, as shown in the illustration. This will make the following procedures easier.

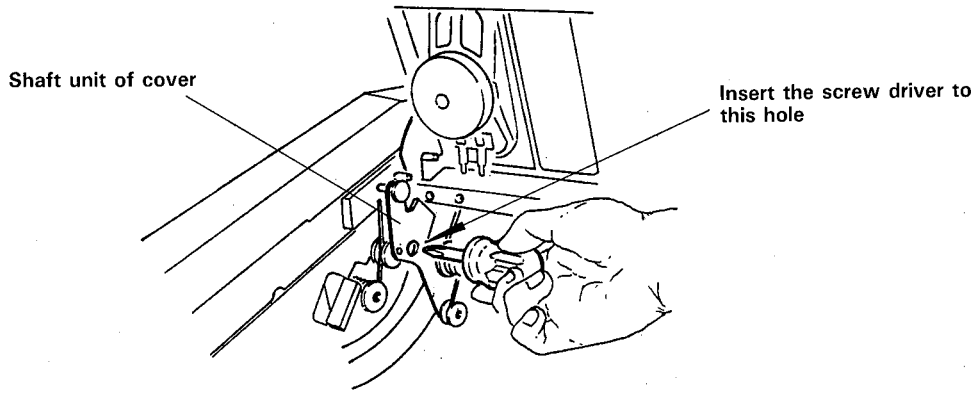

1-6 Remove the nine (9) screws marked④, put the panel assembly and cover in their original position, and then remove the dust cover through the rear side of the cover. After taking the dust cover out of the unit, secure the panel assembly and cover by reversing the procedure described above. This will give you access to the circuit boards located in the unit.

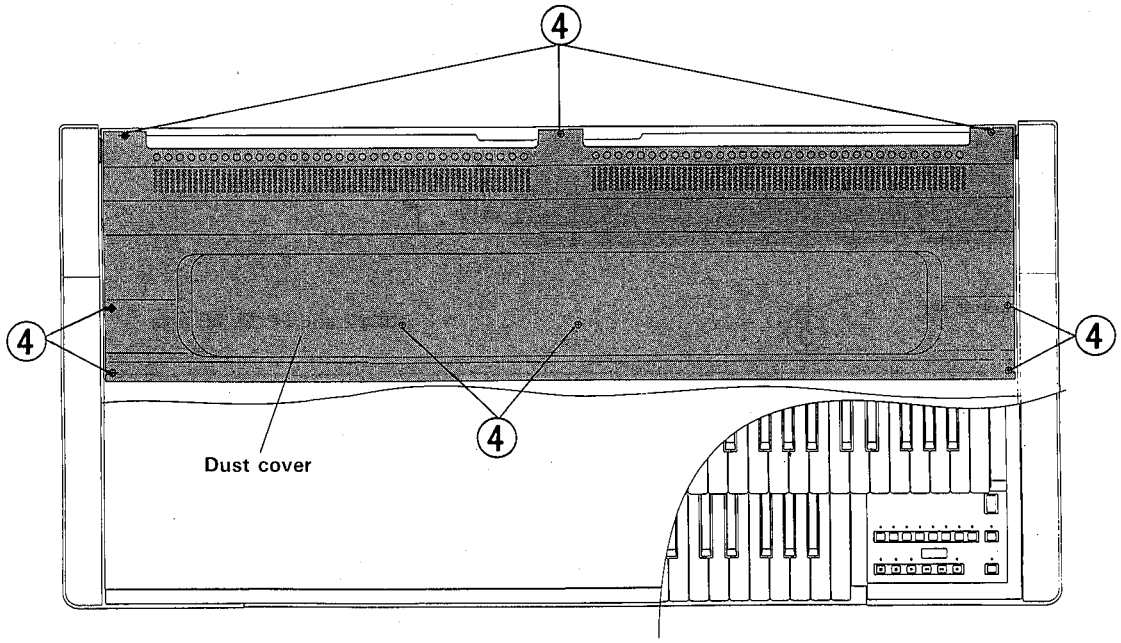

2 DM Circuit Board Removal

2-1 Open the panel and remove the dust cover. (see procedure 1)
2-2 Remove the fifteen (15) screws marked ⑤, then remove the F and R shield covers.
2-3 After the twenty two (22) screws marked ⑥ have been removed, then the DM circuit board can be removed.
2-4 Located on the DM circuit board are ROM1, ROM2 and EF circuit boards. (ROM2 and EF are attached to the DM of the EL-90.)

3 ROM1, ROM2 and EF Circuit Boards Removal

(ROM2 and EF are attached to the DM of the EL-90.)
3-1 Open the panel and remove the dust cover. (see procedure 1)
3-2 Remove the fifteen (15) screws marked ⑤, then remove the F and R shield covers.
3-3 Remove each of the ROM1, ROM2 and EF circuit boards by lifting it upwards.

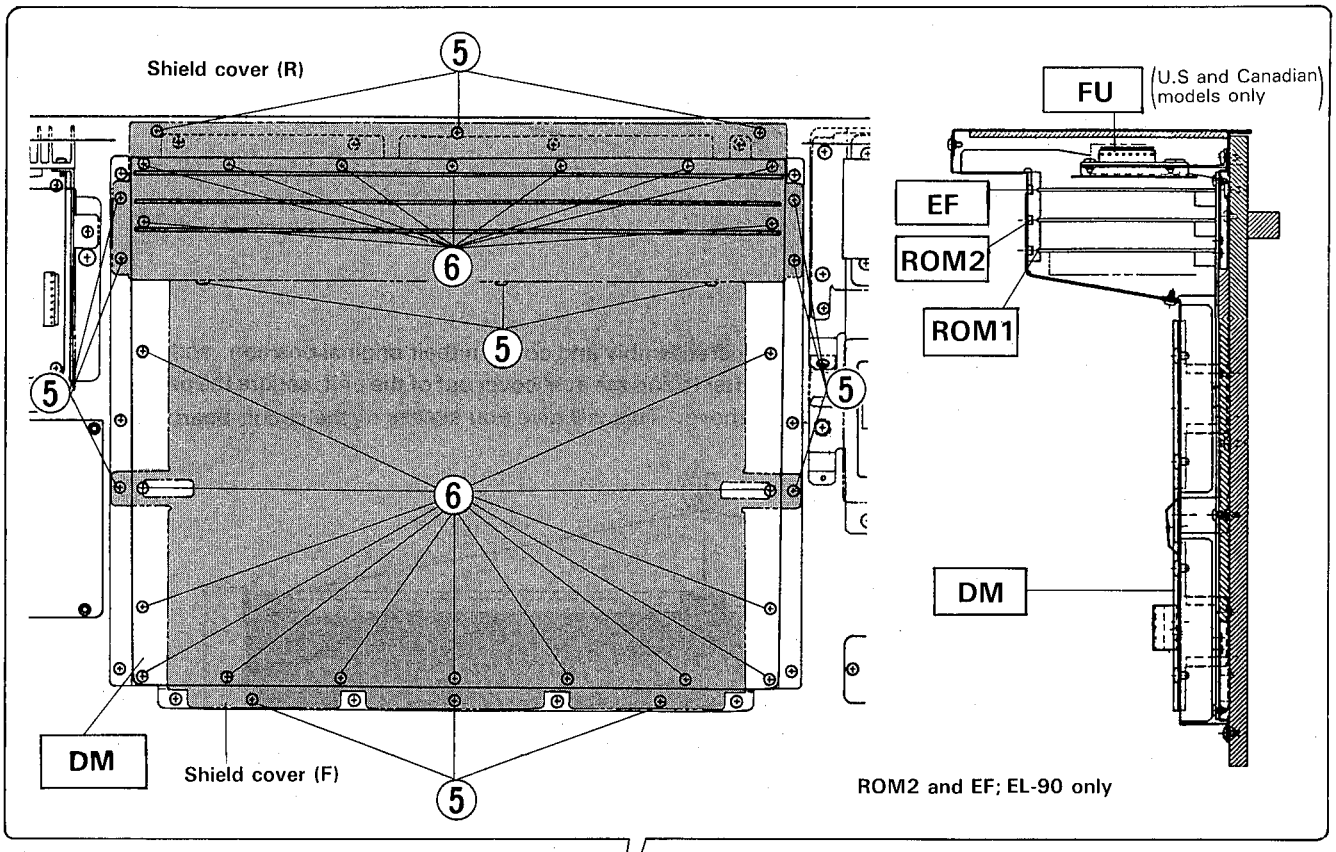

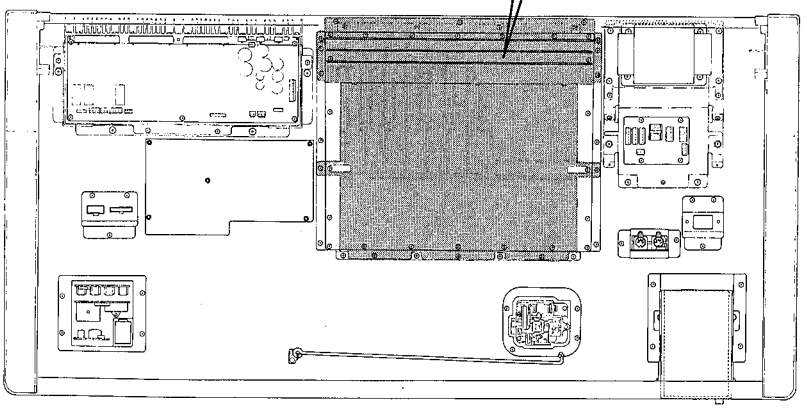

4 ANG Circuit Board Removal

4-1 Open the panel and remove the dust cover. (see procedure 1)
4-2 Remove the ANG circuit board while pressing the tips of the five (5) spacers marked ⑧.

5 RA, AUX, MIC and HP Circuit Boards Removal

(MIC circuit board is only located in the EL-90.)
5-1 Open the panel. (see procedure 1)
5-2 To remove the accessory unit, remove the four (4) screws marked ⑨.
5-3 EL90: The RA circuit board can be removed by removing the four (4) hexagonal nuts.
EL70: The RA circuit board can be removed by removing the two (2) hexagonal nuts.
5-4 The AUX circuit board can be removed by removing the two (2) screws marked ⑦.
5-5 The MIC circuit board can be removed by removing the two (2) hexagonal nuts after the mic knob has been removed.
5-6 The HP circuit board can be removed by removing the hexagonal nut.

6 MIDI Circuit Board Removal

6-1 Open the panel and remove the dust cover. (see procedure 1)
6-2 To remove the MIDI unit remove the two (2) screws marked ⑩.
6-3 Remove the two (2) screws marked ⑪, then the MIDI circuit board can be removed.

7 Floppy Disk Drive and MDR Circuit Board Removal

7-1 Open the panel. (see procedure 1)
7-2 Remove the four (4) screws marked ⑫, then the MDR assembly can be removed.
7-3 The floppy disk drive can be removed by removing the four (4) screws marked ⑬.
7-4 After the four (4) screws marked ⑭ have been removed, the MDR circuit board can be removed.

8 PRM Circuit Board Removal

8-1 Open the panel and remove the dust cover. (see procedure 1)
8-2 To remove the cover, remove the three (3) screws marked ⑮.
8-3 Remove the four (4) screws marked ⑯, then the PRM circuit board can be removed.

9 Power Transformer Removal

9-1 Open the panel and remove the dust cover. (see procedure 1)
9-2 To remove the cover, remove the six (6) screws marked ⑰.
9-3 Remove the four (4) screws marked ⑱, then the power transformer can be removed.

10 Power Amplifier Removal

10-1 Open the panel and remove the dust cover. (see procedure 1)
10-2 Remove the ANG circuit board. (see procedure 4)
10-3 Remove the four (4) screws marked ⑲, then remove the shield cover.
10-4 After the four (4) screws marked 2⑳ have been removed, then the power amplifier can be removed.

11 Knee Lever Unit Removal

11-1 Open the panel. (see procedure 1)
11-2 Remove the four (4) screws marked ㉑, then the knee lever unit can be removed.

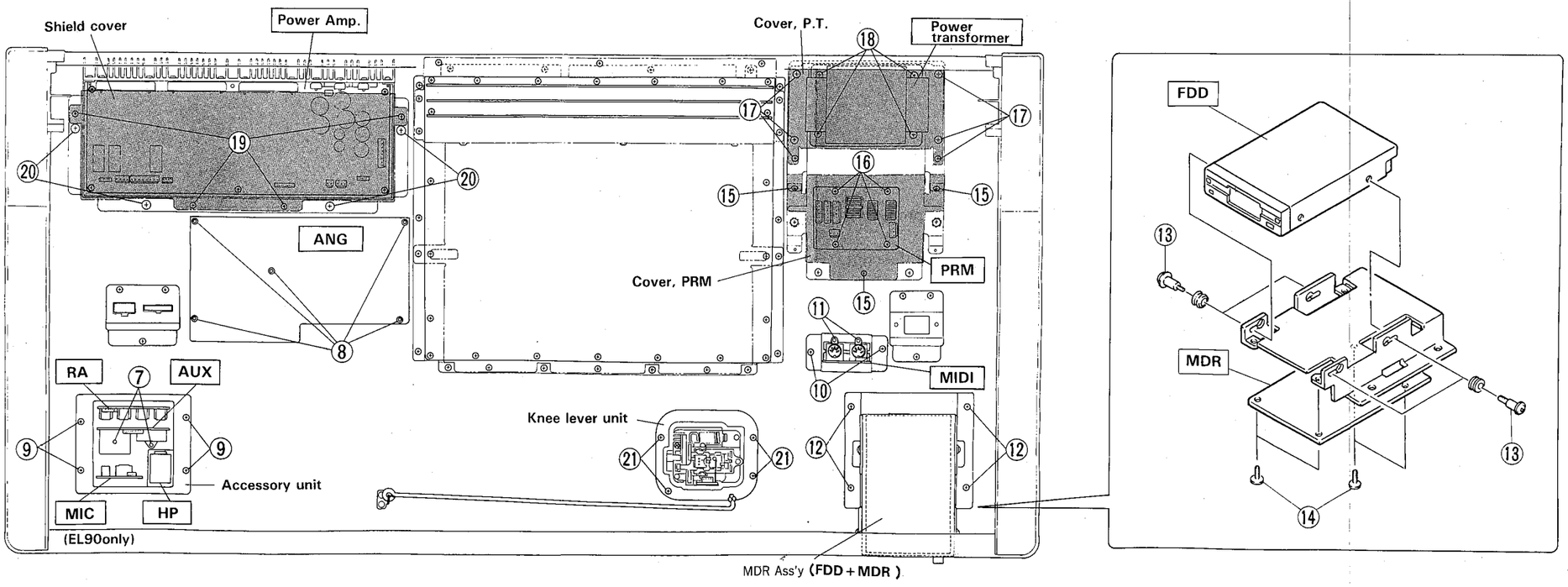

12 Lower Keyboard Assembly Removal

12-1 Open the panel. (see procedure 1)
12-2 Remove the four (4) screws marked ㉒ and two (2) screws marked ㉓, then remove the lower keyboard assembly with the lower front rail.
12-3 The lower front rail can be removed by removing the three (3) screws marked ㉔.

13 Upper Keyboard Assembly Removal

13-1 Open the panel. (see procedure 1)
13-2 Remove the lower keyboard assembly. (see procedure 12)
13-3 Remove the four (4) screws marked ㉕ and three (3) screws marked ㉖, then remove the upper keyboard assembly.

14 PN1 Circuit Board Removal

14-1 Open the panel. (see procedure 1)
14-2 After the fourteen (14) screws marked ㉗ have been removed, then the PN1 circuit board can be removed.

15 PN2 Circuit Board Removal

15-2 Open the panel. (see procedure 1)
15-2 Remove the lower keyboard assembly. (see procedure 12)
15-3 Remove the upper keyboard assembly. (see procedure 13)
15-4 The PN2 circuit board can be removed by removing the six (6) screws marked ㉙.

16 PN3 Circuit Board Removal

16-1 Open the panel. (see procedure 1)
16-2 Remove the lower keyboard assembly. (see procedure 12)
16-3 Remove the upper keyboard assembly. (see procedure 13)
16-4 The PN3 circuit board can be removed by removing the four (4) screws marked ⓐ.

17 PN4 Circuit Board Removal

17-1 Open the panel. (see procedure 1)
17-2 After the six (6) screws marked ㉘ have been removed, then the PN4 circuit board can be removed.

18 CP1 Circuit Board Removal

18-1 Open the panel. (see procedure 1)
18-2 After the three (3) screws marked ㉚ have been removed, then the CP1 circuit board can be removed.

19 CP2, CP3 and CP4 Circuit Boards Removal

19-1 Open the panel. (see procedure 1)
19-2 Remove the lower keyboard assembly. (see procedure 12)
19-3 Remove the upper keyboard assembly. (see procedure 13)
19-4 The CP2 circuit board can be removed by removing the fifteen (15) screws marked ㉛.
19-5 The CP3 circuit board can be removed by removing the eleven (11) screws marked ㉜.
19-6 The CP4 circuit board can be removed with the bracket by removing the ten (10) screws marked ㉝.

20 MVR Circuit Board Removal

20-1 Open the panel. (see procedure 1)
20-2 Remove the three (3) screws marked ㉞, then remove the MVR circuit board with the knob and bracket.
20-3 Pull out the knob and then remove the hexagonal nut to remove the bracket.

21 LCD Circuit Board Removal

21-1 Open the panel. (see procedure 1)
21-2 To remove the LCD module, remove the four (4) screws marked ㉟.
21-3 Remove the LCD circuit board from the LCD module.

22 Power Switch Removal

22-1 Open the panel. (see procedure 1)
22-2 After the two (2) screws marked ㊱ have been removed, then the power switch can be removed.
22-3 Remove the button and cover from the power switch.

23 Left Monitor Speaker Removal

23-1 Open the panel. (see procedure 1)
23-2 Remove the four (4) screws marked ㊲, then the left monitor speaker can be removed.

24 Right Monitor Speaker Removal

24-1 Open the panel. (see procedure 1)
24-2 Remove the lower keyboard assembly. (see procedure 12)
24-3 Remove the upper keyboard assembly. (see procedure 13)
24-4 Remove the four (4) screws marked ㊳, then the right monitor speaker can be removed.

25 PS1 and PS2 Circuit Boards Removal

25-1 Open the panel. (see procedure 1)
25-2 Remove the lower keyboard assembly. (see procedure 12)
25-3 Remove the upper keyboard assembly. (see procedure 13)
25-4 The PS1 circuit board can be removed by removing the five (5) screws marked ㊴.
25-5 The PS2 circuit board can be removed by removing the four (4) screws marked ㊵.

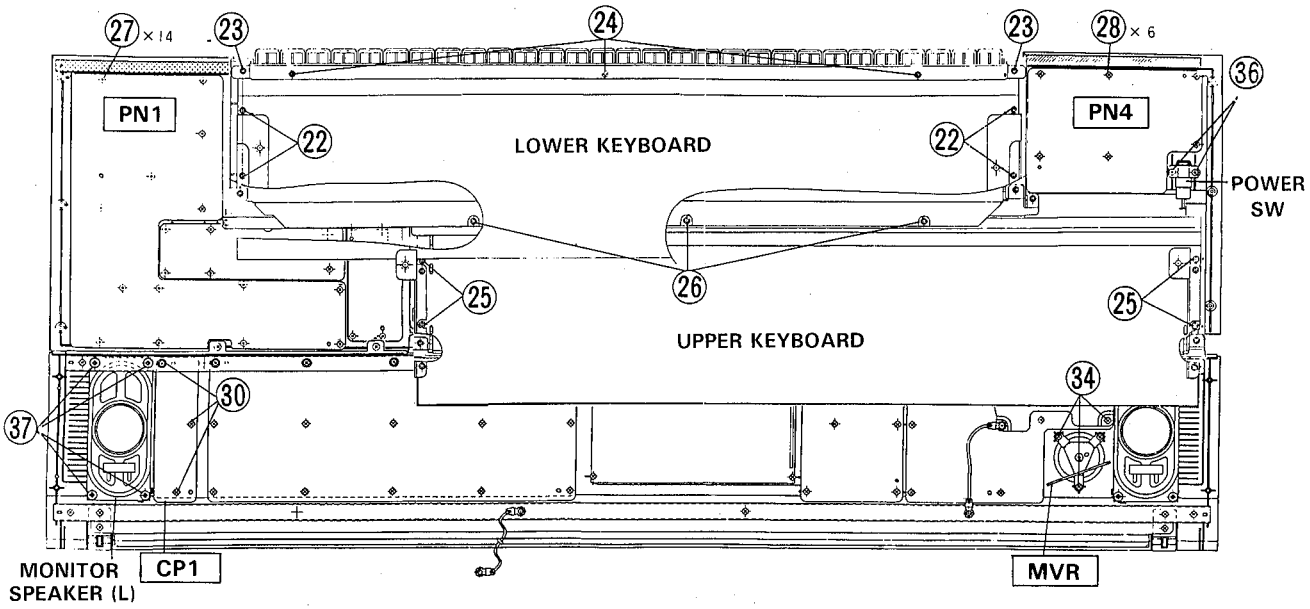

*After the UK and LK have been removed, you can remove circuit boards shown below.

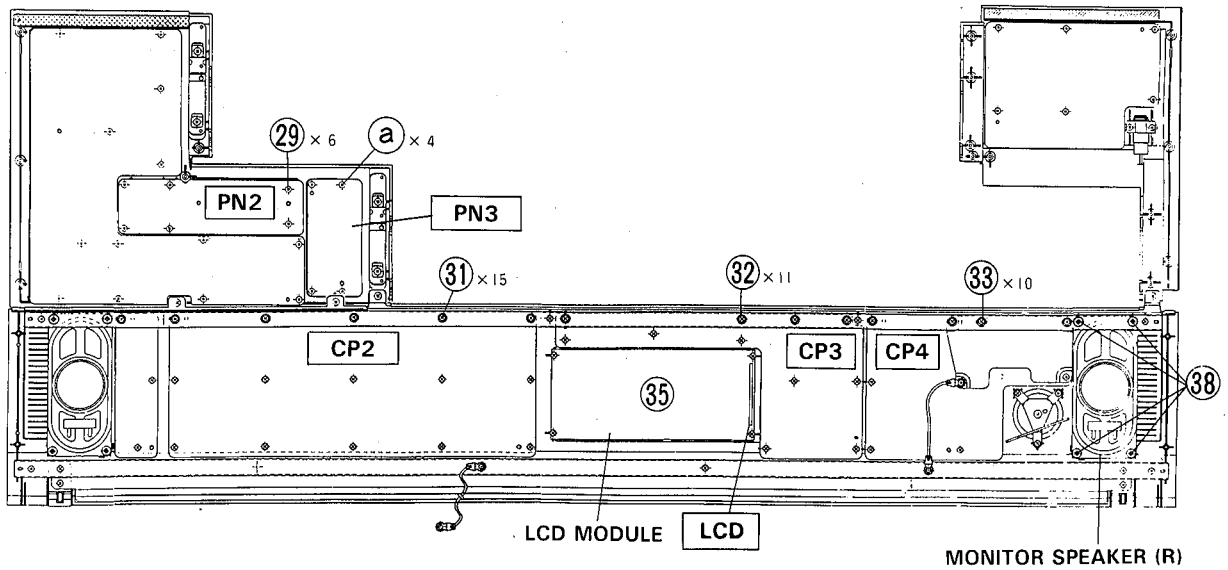

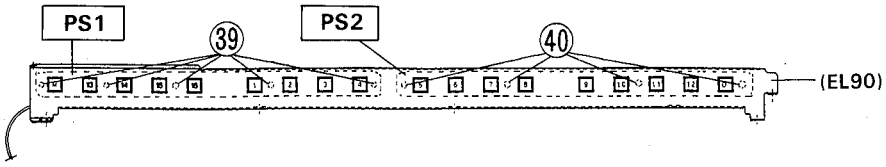

* Removal of the lamp in the registration memory switch

1 Remove the key top by pulling it toward you using a pair of pliers. You should attach tapes on both side of the key top to avoid to damage it before.

2 Take the lamp out of the case with the holder using a tweezers. At this time, if the pusher was out of the case, you put it back to the case and replace a new lamp and holder then attach the key top as shown illustration.

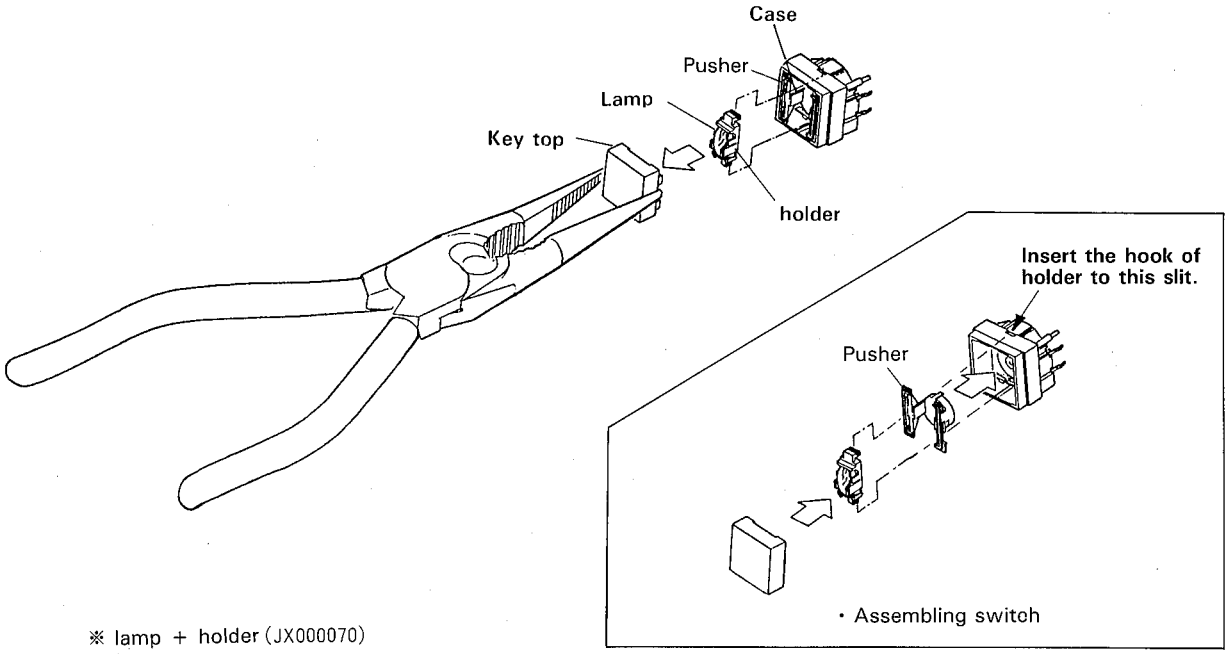

※ lamp + holder (JX000070)

26 Expression Pedals Removal

26-1 The expression pedal can be removed by removing the screw marked ㊶.

26-2 EL-90 only: Also the 2nd expression pedal can be removed by removing the screw marked ㊶.

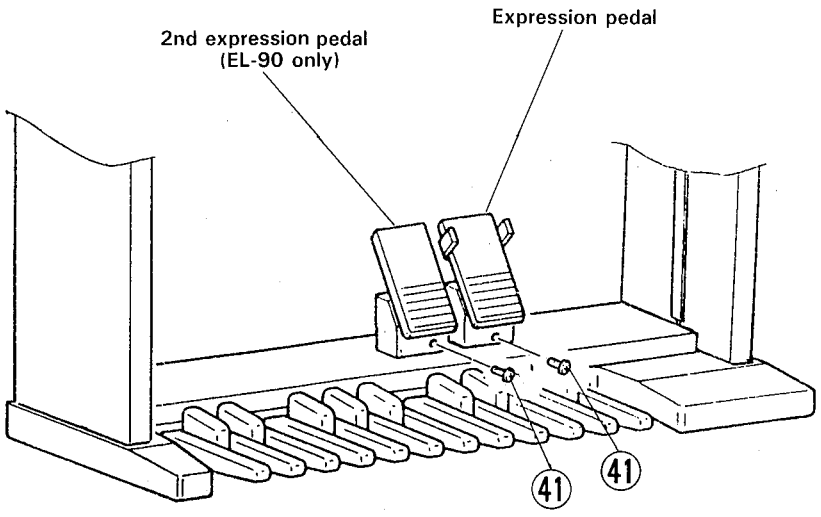

27 Pedal Keyboard Assembly Removal

27-1 Remove the expression pedals. (see procedure 26)
27-2 Remove the PK cable. (see procedure 29-2)
27-3 To make it easier to remove the pedal keyboard, place a soft blanket or similar material on the floor, place the left side board of the Electone on it - MAKING SURE THAT IT CAN NOT FALL.
27-4 To remove the PK cover, remove the ten (10) screws marked ㊷ and five (5) screws marked ㊸.
27-5 After the five (5) screws marked ㊹ have been removed, then the pedal keyboard assembly can be removed.

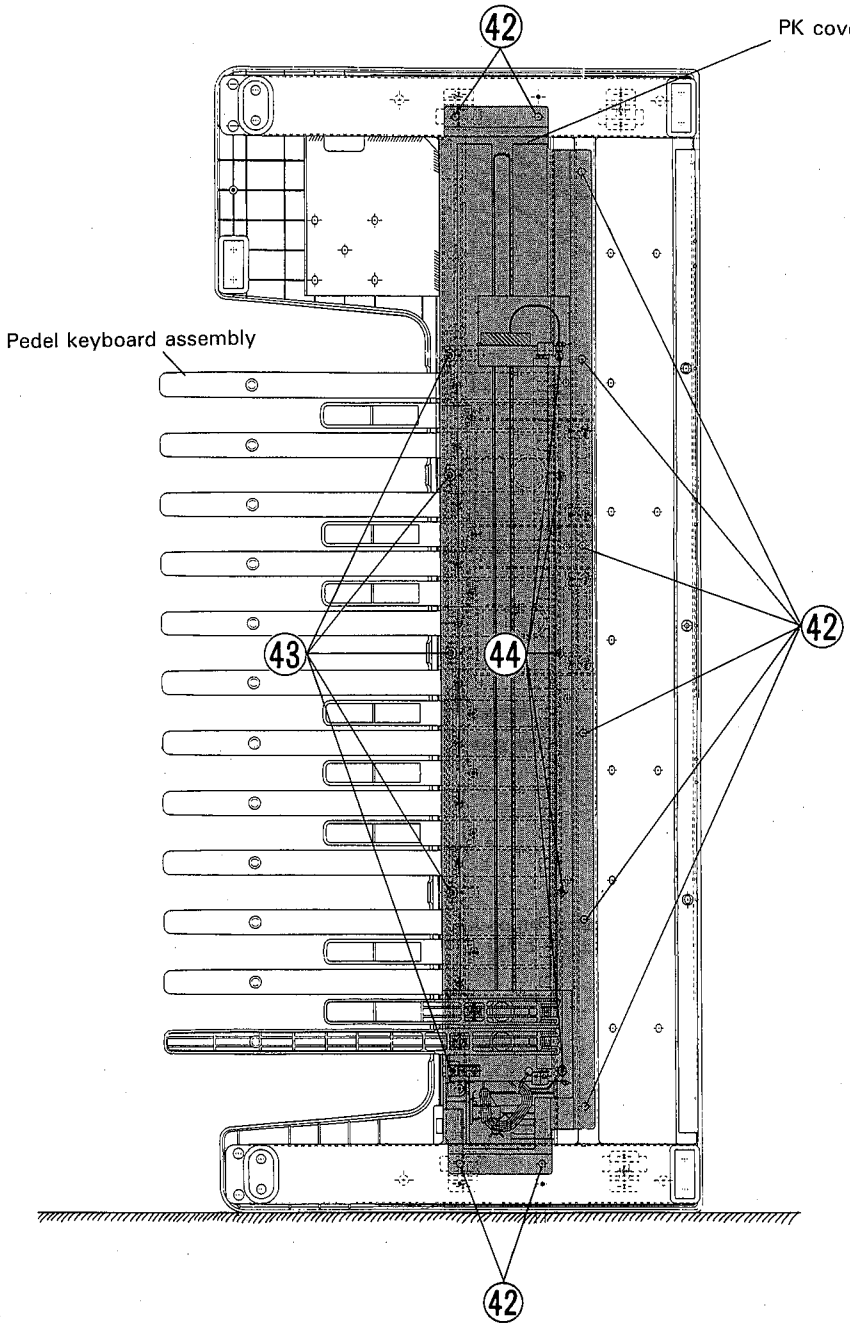

28 AC Cord Removal

28-1 Remove the grille net. (see procedure 29-1)
28-2 Pull the AC cord out of the connector located on the under side of the main unit. (see procedure 29-2)
28-3 Remove the AC cord cover attached to the groove of the right side board.
28-4 Remove the cover by pushing it's front and lifting up from the front and out.
28-5 Afterwards, you can remove the AC cord.

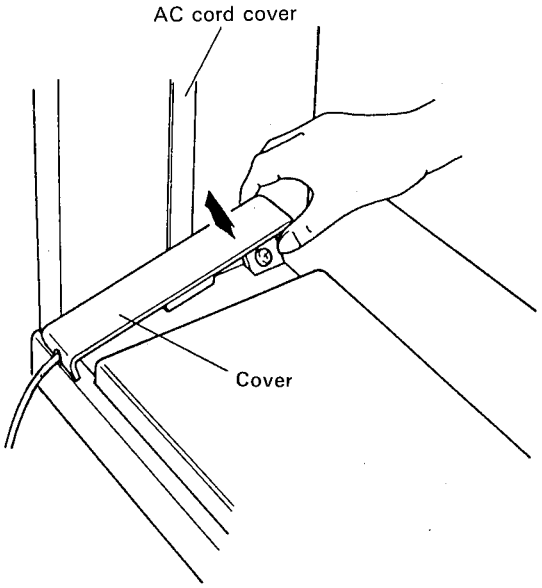

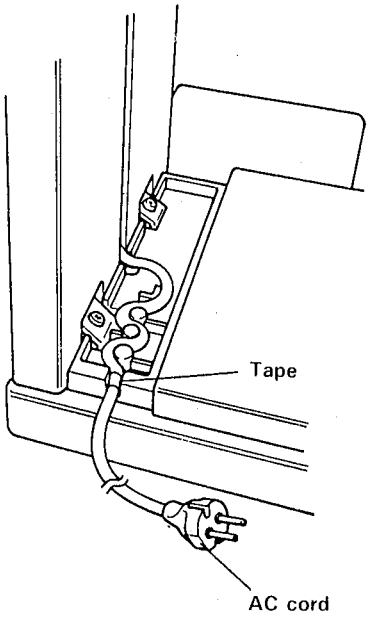

29 Main Unit Removal

29-1 Remove the grille net.

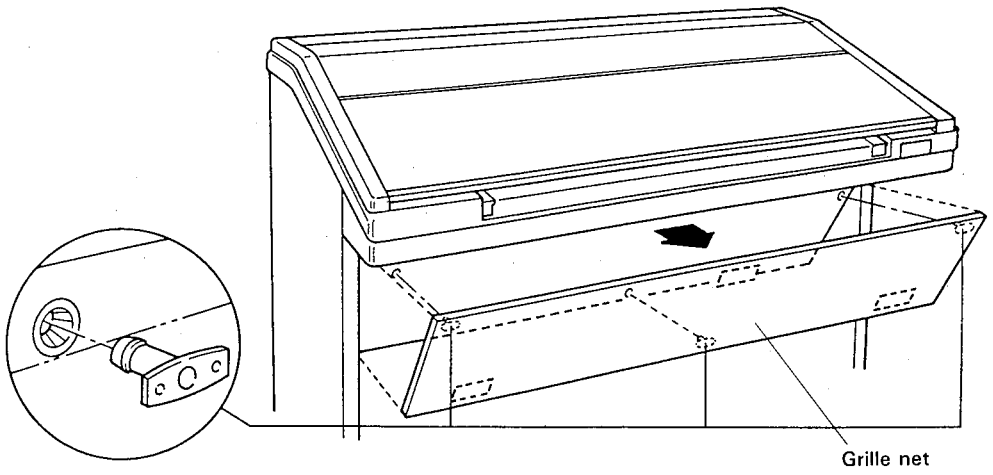

29-2 Pull out the AC cord, speaker cord and pedal cord from connectors located under side of the main unit.

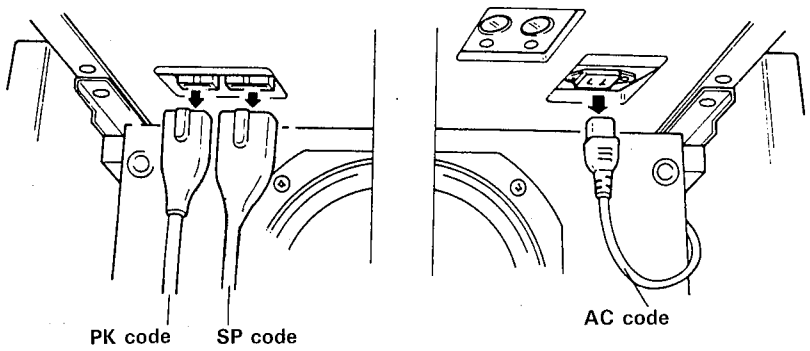

29-3 Remove the four (4) screws retaining the main unit, two (2) marked Ⓐ on the front and two (2) marked Ⓑ on the rear as shown in the illustration. Then carefully lift the main unit up from the side boards taking care not to pinch your fingers.

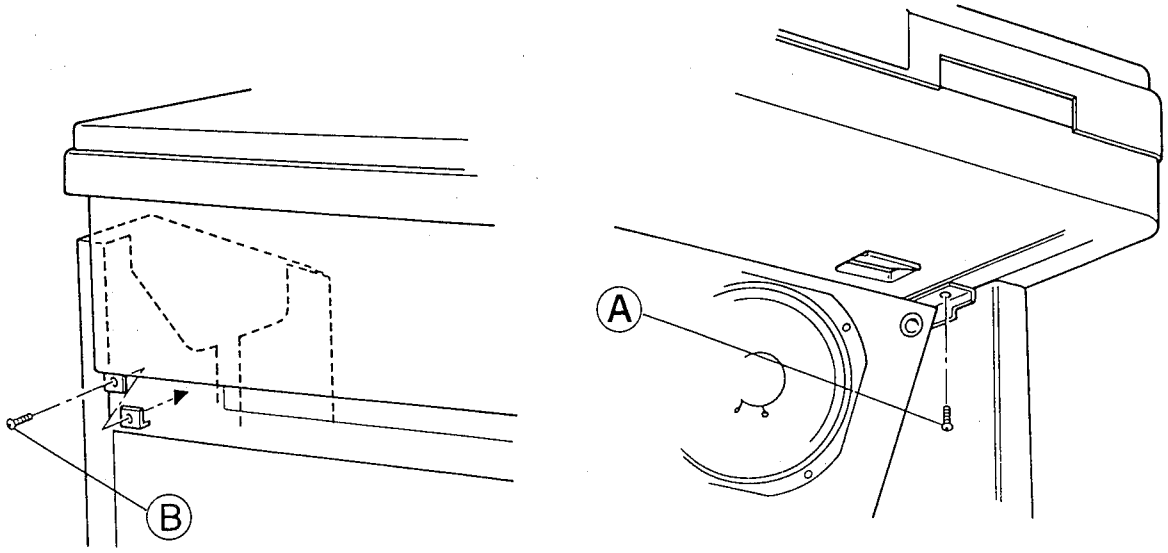

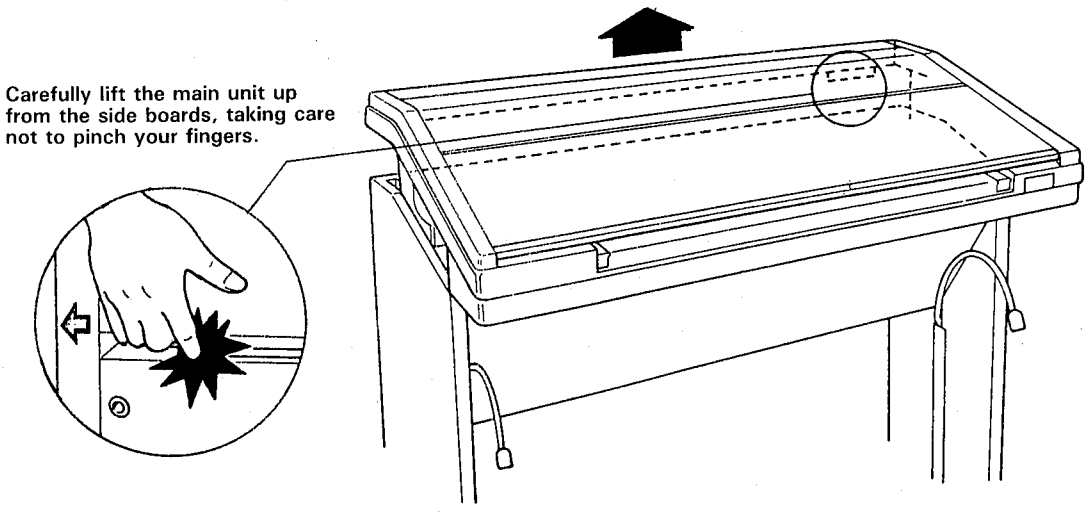

30 Speaker Box Removal

30-1 Remove the main unit. (see procedure 29)

30-2 Remove the four (4) screws marked Ⓒ and four (4) screw marked Ⓓ. After these screws have been removed, lift the speaker box up and then slide it toward the back, then remove.

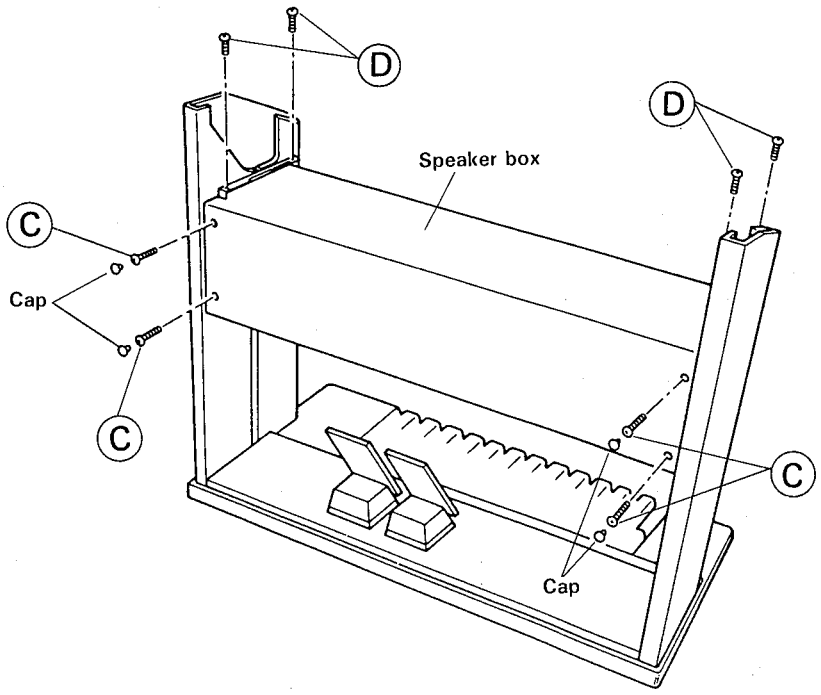

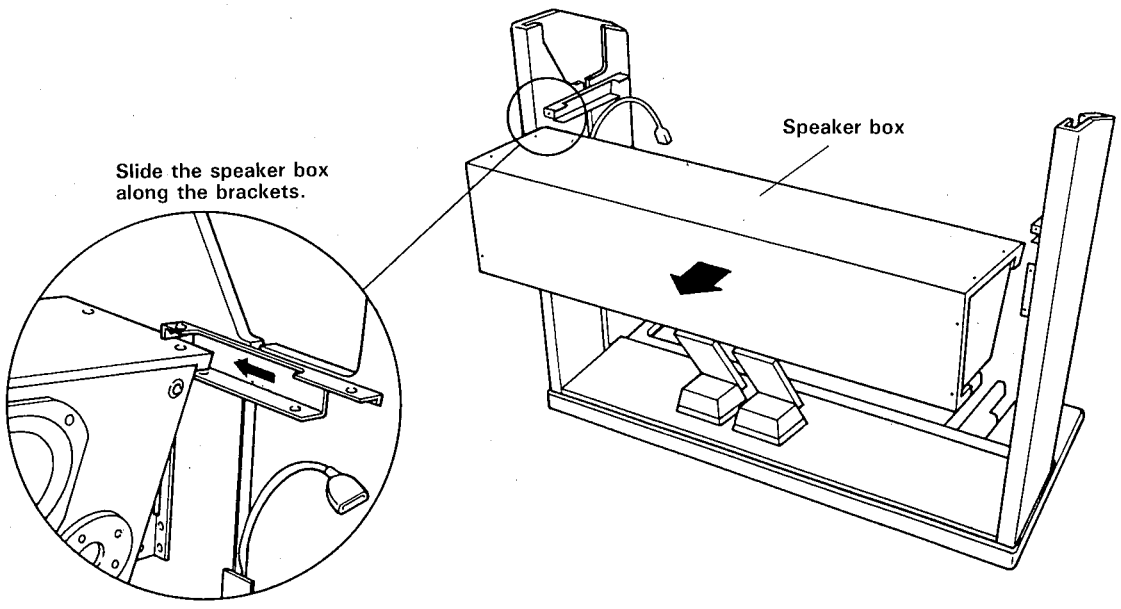

■LSI PIN DESCRIPTION

• HD63C03YP (XB529A00) Main CPU

PIN NO.	NAME	I/O	FUNCTION	PIN NO.	NAME	I/O	FUNCTION
1	Vss		Ground	33	Vcc		DC Supply (+5V)
2	XTAL	I	Clock	34	A15	O	Address bus
3	EXTAL	I	Clock	35	A14	O	Address bus
4	MP0	I	Mode program	36	A13	O	Address bus
5	MP1	I	Mode program	37	A12	O	Address bus
6	$\overline{RES}$	I	Reset	38	A11	O	Address bus
7	$\overline{STBY}$	I	Stand-by mode signal	39	A10	O	Address bus
8	$\overline{NMI}$	I	Non-maskable interrupt	40	A9	O	Address bus
9	P20	I	Port 2	41	A8	O	Address bus
10	P21	I	Port 2	42	Vss		Ground
11	P22	I	Port 2	43	A7	O	Address bus
12	P23	I	Port 2	44	A6	O	Address bus
13	P24	O	Port 2	45	A5	O	Address bus
14	P25	O	Port 2	46	A4	O	Address bus
15	P26	O	Port 2	47	A3	O	Address bus
16	P27	O	Port 2	48	A2	O	Address bus
17	$\overline{IRQ1}$	I	Interrupt request	49	A1	O	Address bus
18	$\overline{IRQ2}$	I	Interrupt request	50	A0	O	Address bus
19	P52	I/O	Port 5	51	D7	I/O	Data bus
20	P53	I/O	Port 5	52	D6	I/O	Data bus
21	$\overline{IS}$	I	Input strobe	53	D5	I/O	Data bus
22	$\overline{OS}$	O	Output strobe	54	D4	I/O	Data bus
23	$\overline{OPZIC}$	O	Initial clear (OPZ)	55	D3	I/O	Data bus
24	$\overline{DALIC}$	O	Initial clear (DAL)	56	D2	I/O	Data bus
25	P60	I	Port 6	57	D1	I/O	Data bus
26	P61	I	Port 6	58	D0	I/O	Data bus
27	P62	I	Port 6	59	$\overline{BA}$	O	Bus available
28	P63	I	Port 6	60	$\overline{LIR}$	O	Load instruction register
29	P64	I	Port 6	61	R/$\overline{W}$	O	Read/Write control
30	P65	I	Port 6	62	$\overline{WR}$	O	Write control
31	P66	I	Port 6	63	$\overline{RD}$	O	Read control
32	P67	I	Port 6	64	E	O	Enable

• TC17G005AN-0023 (XB809A00) MI-1 (M-Electone Interface)

PIN NO.	NAME	I/O	FUNCTION	PIN NO.	NAME	I/O	FUNCTION
1	Vss2	I	Power supply ground	22	Vss	I	Power supply ground
2	AIS	I	For address data multiplex operation (fixed to low)	23	A7	I	Address bus
				24	A6	I	Address bus
3	CLK	I	Shift clock input	25	A5	I	Address bus
4	IRQ	O	Interrupt request	26	A4	I	Address bus
5	D0	I/O	Data Bus	27	A3	I	Address bus
6	D1	I/O	Data Bus	28	A2	I	Address bus
7	D2	I/O	Data Bus	29	A1	I/O	Address bus
8	D3	I/O	Data Bus	30	A0	I/O	Address bus
9	D4	I/O	Data Bus	31	$\overline{DRP}$	O	Data request PK
10	D5	I/O	Data Bus	32	$\overline{DRL}$	O	Data request LK
11	D6	I/O	Data Bus	33	$\overline{DRU}$	O	Data request UK
12	D7	I/O	Data Bus	34	$\overline{EVRP}$	I	Event receive request PK
13	ALE	I/O	Address latch enable	35	$\overline{EVRL}$	I	Event receive request LK
14	$\overline{CK}$	I	Clock (2MHz)	36	$\overline{EVRU}$	I	Event receive request UK
15	$\overline{WR}$	I	Write control	37	$\overline{KD}$	I	Key data
16	$\overline{RD}$	I	Read control	38	SCLOK	O	S clock
17	$\overline{CE}$	I	Chip enable	39	SD	I/O	Serial data
18	$\overline{IC}$	I	Initial clear	40	$\overline{RRDY}$	I	Transfer start enable signal
19	$\overline{IS}$	I	Input strobe	41	$\overline{TXREQ}$	I	Transfer request signal
20	$\overline{OS}$	O	Output strobe	42	VDD	I	+5V
21	Vss	I	Power supply ground				

• MS37700SAFP (XI286A00) CPU

PIN NO.	NAME	I/O	FUNCTION	PIN NO.	NAME	I/O	FUNCTION
1	AFTU	I	UK after touch	41	A19/D3	I/O	Address bus/Data bus
2	DIC1	O	Initial clear (MI1, PN, LCD)	42	A18/D2	I/O	
3	DIC2	O	Initial clear (KBS)	43	A17/D1	I/O	
4	DIC3	O	Initial clear (MDR)	44	A16/D0	I/O	
5	DIC4	O	—	45	A15	O	Address bus
6	DIR			46	A14	O	
7	INT0	I	Interrupt request	47	A13	O	
8	AIC	O	Initial clear	48	A12	O	
9	1.5MHz	O	1.5 MHz output	49	A11	O	
10	KNEE	I	Knee lever control	50	A10	O	
11	250KHz	O	250KHz output	51	A09	O	
12	CONF	I	CONFIRM button data	52	A08	O	
13	PWM	O	Pulse width modulation	53	A07	O	
14	LD03/R038	O	LCD control	54	A06	O	
15	LD02/R039	O		55	A05	O	
16	LD01/R040	O		56	A04	O	
17	LD00/R041	O		57	A03	O	
18	LD07/R042	O		58	A02	O	
19	LD06/R043	O		59	A01	O	
20	LD05/R044	O		60	A00	O	
21	LD04/R045	O		61	MDR-OUT	O	MDR data output
22	MIN	I	Memory inserted	62	MDR-IN	I	MDR data input
23	WP	I	Write protect data	63	P85	I/O	Port 8
24	RDY	I	Ready	64	P84	I/O	
25	HOLD	I	Hold request	65	MIDI-OUT	O	MIDI data output
26	BYTE	I	Byte enable	66	MIDI-IN	I	MIDI data input
27	CNVss	I	Processor mode control	67	P81	I/O	Port 8
28	RESET	I	Reset	68	P80	I/O	
29	XIN	I	Clock	69	Vcc		Power supply
30	Xout	O		70	AVcc		Analog power supply
31	E	O	Enable	71	Vref	I	Reference voltage
32	Vss		Ground	72	AVss		Analog ground
33	HLDA	O	Hold acknowledge	73	Vss		Ground
34	ALE	O	Address latch enable	74	MODEL1	I	Model identification
35	BHE	O	Byte high enable	75	MODEL2	I	
36	R/W	O	Read write control	76	AFTP2	I	PK after touch
37	A23/D7	I/O	Address bus/Data bus	77	AFTP1	I	
38	A22/D6	I/O		78	2nd EXP	I	2nd expression pedal
39	A21/D5	I/O		79	EXP	I	Expression pedal
40	A20/D4	I/O		80	AFTL	I	LK after touch

• TMC57800N (XG662A00) MIX5 (Mixer)

PIN NO.	NAME	I/O	FUNCTION	PIN NO.	NAME	I/O	FUNCTION
1	MXI7	I	Voice data input	11	SYW	I	Synch pulse
2	MXI6	I		12	CDO	O	Control data output
3	MXI5	I		13	XCLK	I	CDI and CDO in/out clock
4	MXI4	I		14	CDI	I	Control data input
5	MXI3	I		15	CRS	I	Counter reset for CDI and CDO
6	MXI2	I		16	MXO0	O	Voice data output
7	MXI1	I		17	MXO1	O	
8	MXI0	I		18	MXO2	O	
9	CLK	I	Master clock	19	MXO3	O	
10	Vss		Ground	20	Vcc		Power supply (+5V)

• TMP82C37AM-5 (XI294A00) DMA (Direct Memory Access Controller)

PIN NO.	NAME	I/O	FUNCTION	PIN NO.	NAME	I/O	FUNCTION
1	$\overline{IOR}$	I/O	I/O read	21	DB7	I/O	Data bus
2	$\overline{IOW}$	I/O	I/O write	22	DB6	I/O	
3	$\overline{MEMR}$	O	Memory read	23	DB5	I/O	
4	$\overline{MEMW}$	O	Memory write	24	DACK1	O	DMA acknowledge
5	NC		Not used	25	DACK0	O	
6	READY	I	Ready	26	DB4	I/O	Data bus
7	HLDA	I	Hold acknowledge	27	DB3	I/O	
8	ADSTB	O	Address strobe	28	DB2	I/O	
9	AEN	O	Address enable	29	DB1	I/O	
10	HRQ	O	Hold request	30	DB0	I/O	
11	$\overline{CS}$	I	Chip select	31	V_{CC}		Power supply
12	CLK	I	Clock	32	A0	I/O	Address bus
13	RESET	I	Reset	33	A1	I/O	
14	DACK2	O	DMA acknowledge	34	A2	I/O	
15	DACK3	O		35	A3	I/O	
16	DREQ3	I	DMA request	36	$\overline{EOP}$	I/O	End of process
17	DREQ2	I		37	A4	I/O	Address bus
18	DREQ1	I		38	A5	I/O	
19	DREQ0	I		39	A6	I/O	
20	V_{SS}		Ground	40	A7	I/O	

• TMP82C54M-2 (XE451A00) Programable Timer/Counter

PIN NO.	NAME	I/O	FUNCTION	PIN NO.	NAME	I/O	FUNCTION
1	D7	I/O	Data bas	13	OUT1	O	Signal output
2	D6	I/O		14	GATE1	I	Counter gate control
3	D5	I/O		15	CLK1	I	Clock
4	D4	I/O		16	GATE2	I	Counter gate control
5	D3	I/O		17	OUT2	O	Signal output
6	D2	I/O		18	CLK2	I	Clock
7	D1	I/O		19	A0	I	Address bus
8	D0	I/O		20	A1	I	
9	CLK0	I	Clock	21	$\overline{CS}$	I	Chip select
10	OUT0	O	Signal output	22	$\overline{RD}$	I	Read control
11	GATE0	I	Counter gate control	23	$\overline{WR}$	I	Write control
12	V_{SS}		Ground	24	V_{CC}		Power supply

• WD37C65C (XE909C00) FDC (Floppy Disk Subsystem Controller)

PIN NO.	NAME	I/O	FUNCTION	PIN NO.	NAME	I/O	FUNCTION
1	$\overline{RD}$	I	Read	21	CLK 2	I	Clock 2
2	$\overline{WR}$	I	Write	22	DRV	I	Drive type
3	$\overline{CS}$	I	Chip select	23	CLK 1	I	Clock 1
4	A 0	I	Address line	24	PCVAL	I	Precompensation value
5	$\overline{DACK}$	I	DMA acknowledge	25	$\overline{HS}$	O	Head select
6	TC	I	Terminal count	26	$\overline{WE}$	O	Write enable
7	D 0	I/O	Data bus	27	$\overline{WD}$	O	Write data
8	D 1	I/O		28	$\overline{DIRC}$	O	Direction
9	D 2	I/O		29	$\overline{STEP}$	O	Step pulse
10	D 3	I/O		30	$\overline{DS\ 1}$	O	Drive select 1
11	D 4	I/O		31	$\overline{VSS}$		Ground
12	D 5	I/O		32	$\overline{DS\ 2}$	O	Drive select 2
13	D 6	I/O		33	$\overline{MO\ 1}$	O	Motor on 1
14	D 7	I/O		34	$\overline{MO\ 2}$	O	Motor on 2
15	DMA	O	Direct memory access	35	$\overline{HDL}$	O	Head Loaded
16	IRQ	O	Interrupt request	36	$\overline{RPM}$	O	Reduce write current, revolutions per minute
17	$\overline{LDOR}$	I	Load operations register	37	$\overline{WP}$	I	Write protected
18	$\overline{LDCR}$	I	Load control register	38	$\overline{TR00}$	I	Track 00
19	RST	I	Reset	39	$\overline{IDX}$	I	Index
20	RDD	I	Read disk data	40	VCC		Power supply

• YM2406 (XA804A00) DFL (Digital Filter)

PIN NO.	NAME	I/O	FUNCTION	PIN NO.	NAME	I/O	FUNCTION
1	V_{SS}		Power supply ground	13	NC		Not used
2	$\overline{TST}$	I	Test pin	14	NC		
3	$\overline{IC}$	I	Initial clear	15	NC		
4	SI	I	32 bit × 2 channel serial	16	NC		
5	XCLK	I	CD transmission clock	17	NC		
6	SYW	I	Synchronization signal	18	NC		
7	SO	O	32 bit × 2 channel serial	19	NC		
8	CLK	I	Clock (3.2MHz)	20	NC		
9	V_{DD}		Power supply (+5V)	21	NC		
10	NC		Not used	22	$\overline{CDO}$	O	CD output
11	NC			23	$\overline{CRS}$	I	CD counter reset
12	NC			24	CDI	I	CD input

• YM3413 (XE449A00) LDSP (Digital Signal Processor)

PIN NO.	NAME	I/O	FUNCTION	PIN NO.	NAME	I/O	FUNCTION
1	VDD		DC supply (+5V)	21	A5	O	Address bus
2	D7	I/O	Data bus	22	A6	O	
3	D6	I/O		23	A7	O	
4	D5	I/O		24	A8	O	
5	D4	I/O		25	A9	O	
6	D3	I/O		26	A10	O	
7	D2	I/O		27	A11	O	
8	D1	I/O		28	A12	O	
9	D0	I/O		29	A13	O	
10	SI0	I	Serial data input	30	A14	O	
11	SI1	I		31	A15	O	
12	SYW	I	Synchro pulse	32	A16	O	
13	$\overline{WE}$	O	Write enable	33	SO0	O	Serial data output
14	$\overline{OE}$	O	Output enable	34	XCLK	I	Clock
15	A0	O	Address bus	35	$\overline{IC}$	I	Initial Clear
16	A1	O		36	$\overline{CRS}$	I	CD counter reset
17	A2	O		37	CDI	I	CD input
18	A3	O		38	CDo	O	CD output
19	A4	O		39	SO1	O	Serial data output
20	Vss		Ground	40	CLK	I	Clock

• YM3415-B (XE450B00) LEF (L-Effecter)

PIN NO.	NAME	I/O	FUNCTION	PIN NO.	NAME	I/O	FUNCTION
1	+5		Power supply	21	A7	O	Address bus
2	SI0	I	Serial data input	22	A6	O	
3	SI1	I		23	A5	O	
4	SO0	O	Serial data output	24	A4	O	
5	SO1	O		25	A3	O	
6	XCLK	I	Clock	26	A2	O	
7	CDO	O	Control data output	27	A1	O	
8	$\overline{CDI}$	I	Control data input	28	$\overline{A0}$	O	
9	$\overline{CRSR}$	I	CD interface clear	29	$\overline{RAS}$	O	Row address select
10	$\overline{WR}$	I	Write control	30	$\overline{CAS}$	O	Column address select
11	A/D	I	Address/data parameter select	31	$\overline{WE}$	O	Write enable
12	PD0	I/O	Data bus	32	$\overline{OE}$	O	Output enable
13	PD1	I/O		33	D3	I/O	Data bus
14	PD2	I/O		34	D2	I/O	
15	PD3	I/O		35	D1	I/O	
16	PD4	I/O		36	D0	I/O	
17	PD5	I/O		37	TST2	I	Internal test
18	PD6	I/O		38	SYW	I	System synch. signal
19	PD7	I/O		39	$\overline{CLK}$	I	Clock
20	Vss		Ground	40	$\overline{IC}$	I	Initial clear

• YM3028 (XE789A00) DAL2 (Digital Analog Converter Logic)

PIN NO.	NAME	I/O	FUNCTION	PIN NO.	NAME	I/O	FUNCTION
1	DVDD		Power supply	13	to Buff	O	Analog output to buffer amp.
2	SYW	I	Synchro pulse	14	MP	I	Middle point 1/2 VDD bias
3	DGND		Digital ground	15	RC	O	Bias compensation
4	CLK	I	Clock	16	RB	O	Bias-R
5	CRASH	O	Not used	17	AGND		Analog ground
6	ZERO	O		18	AVDD		Analog power supply
7	OUT4	O	Analog signal output	19	LMT/EN	I	Limiter enable
8	OUT3	O		20	IN1	I	Digital data input
9	OUT2	O		21	IN2	I	
10	OUT1	O		22	SEL1	I	Data shift
11	NS	I	Chip test	23	SEL2	I	
12	COM	I	Analog input from buffer amp.	24	IC	I	Initial clear

• YM3440 (XH238A00) LEF2 (L-Eeffector)

PIN NO.	NAME	I/O	FUNCTION	PIN NO.	NAME	I/O	FUNCTION
1	VDD		Power supply	21	RA3	O	DRAM address signal
2	SI0	I	Serial data input	22	RA2	O	
3	SI1	I		23	RA1	O	
4	SO0	O	Serial data output	24	RA0	O	
5	NC		Not used	25	NC		Not used
6	NC			26	NC		
7	SO1	O	Serial data output	27	RD03	I/O	DRAM data bus
8	TST2	I	Internal test	28	RD02	I/O	
9	IC	I	Initial clear	29	RD01	I/O	
10	XCLK	I	Clock (countrol data)	30	RD00	I/O	
11	CDO	O	Control data output	31	OE1	O	Output enable signal
12	CDI	I	Control data input	32	WE1	O	Write enable signal
13	CRS	I	Control data counter reset	33	OE2	O	Output enable signal
14	RA7	O	DRAM address signal	34	WE2	O	Write enable signal
15	NC		Not used	35	NC		Not used
16	NC			36	NC		
17	RA6	O	DRAM address signal	37	RAS	O	DRAM control
18	RA5	O		38	CAS	O	
19	RA4	O		39	SYW	I	Synchro pulse
20	VSS		Ground	40	CLK	I	Clock (3.2 MHz)

• YM3603 (XA805001) KBS1 (Keyboard Scanner)

PIN NO.	NAME	I/O	FUNCTION	PIN NO.	NAME	I/O	FUNCTION
1	VDD		+5V	22	KD	O	8 bit key data. A start bit of "0", stop bit of "1" is added, and the LSB is sent.
2	M4	I	Make point				
3	M3	I					
4	M2	I		23	DR	I	Host data request. When KBS detects the fall of DR, event data transmission is enabled.
5	M1	I					
6	M0	I					
7	B4	I	Break point	24	D0	O	Scan drive pulse
8	B3	I		25	D1	O	
9	B2	I		26	D2	O	
10	B1	I		27	D3	O	
11	B0	I		28	D4	O	
12	TRS	I	Transfer (1)/2 make (0) select	29	D5	O	
13	S21	I	2 make (1)/1 make (0) select	30	D6	O	
14	AVDD		+5 volts for analog circuit	31	D7	O	
15	TST		Test mode (0) select. When testing, the value of the shift register is sent.	32	D8	O	
				33	D9	O	
				34	D10	O	
16	AI	I	Analog voltage for AD conversion input.	35	D11	O	
				36	D12	O	
17	DAC OUT	O	DAC output	37	KI	I	Initial set
18	A GND		Analog circuit Gnd.	38	AEN	I	Outputs AD conversion data (1)/ stops (0)
19	GND		GND				
20	EVR	O	Not used.	39	CK2	I	Connector for 3.25MHz ceramic etc.
21	TXC	I	Clock for serial communication (100K-500K)	40	CK1	I	Connector for 3.25MHz ceramic etc.

• YM7131 (XH236A00) OPLZ (FM Tone Generator)

PIN NO.	NAME	I/O	FUNCTION	PIN NO.	NAME	I/O	FUNCTION
1	D7	I/O	Data bus	15	CLK	I	Clock (6.4 MHz)
2	D6	I/O		16	CLKM	O	Clock (3.2 MHz)
3	D5	I/O		17	SYWI	I	Synch. signal
4	D4	I/O		18	SYWO	O	Synch. signal
5	D3	I/O		19	OP04	O	MEL format signal output
6	D2	I/O		20	OP03	O	
7	D1	I/O		21	OP02	O	
8	D0	I/O		22	OP01	O	
9	$\overline{RD}$	I	Read control	23	A4	I	Address bus
10	$\overline{WR}$	I	Write control	24	A3	I	
11	$\overline{CS}$	I	Chip select	25	A2	I	
12	EXTKON	I	External key on	26	A1	I	
13	$\overline{IC}$	I	Initial clear	27	A0	I	
14	Vss		Ground	28	VDD		Power supply

• YM7132 (XH235B00) OPWZ (AWM Tone Generator)

PIN NO.	NAME	I/O	FUNCTION	PIN NO.	NAME	I/O	FUNCTION
1	MELCK	O	Clock (3.2 MHz)	51	MA19	O	Wave memory address bus
2	CXOUT	O	Clock (6.4 MHz)	52	MA20	O	
3	XTAL		Crystal osc. connection	53	MA21	O	
4	EXTAL			54	MA22	O	
5	$\overline{CS}$	I	Chip select	55	MA23	O	
6	$\overline{RD}$	I	Read control	56	BOE	I	Address bus open enable
7	$\overline{WR}$	I	Write control	57	MD0	I/O	Wave memory data bus
8	$\overline{SYNWR}$	I/O	Register synch write control	58	MD1	I/O	
9	SYI/O	I	$\overline{SYW}$ in/out control	59	MD2	I/O	
10	A0	I	CPU address bus	60	MD3	I/O	
11	A1	I		61	MD4	I/O	
12	A2	I		62	MD5	I/O	
13	A3	I		63	MD6	I/O	
14	A4	I		64	MD7	I/O	
15	Vss		Ground	65	MD8	I/O	
16	D0	I/O	CPU data bus	66	Vss		Ground
17	D1	I/O		67	MD9	I/O	Wave memory data bus
18	D2	I/O		68	MD10	I/O	
19	D3	I/O		69	MD11	I/O	
20	D4	I/O		70	MD12	I/O	
21	D5	I/O		71	MD13	I/O	
22	D6	I/O		72	MD14	I/O	
23	D7	I/O		73	MD15	I/O	
24	TE1		Not used (Test pin)	74	NSI0	I	N-sys input 0
25	TE2			75	NSO0	O	N-sys output 0
26	TEA2			76	NSI1	I	N-sys input 1
27	TESE			77	NSO1	O	N-sys output 1
28	NC			78	KONIN	I	Key on, $\overline{LFO}$ on input
29	NC			79	KONOUT	O	Key on, $\overline{LFO}$ on output
30	TESE			80	SI0	I	Serial data input
31	MA0	O	Wave memory address bus	81	$\overline{SI1}$	I	
32	MA1	O		82	$\overline{CRS}$	O	CD counter reset
33	MA2	O		83	CDO	O	Control data
34	MA3	O		84	SO0	O	Serial data output
35	MA4	O		85	SO1	O	
36	MA5	O		86	SO2	O	
37	MA6	O		87	SO3	O	
38	MA7	O		88	TEAL	I/O	Test pin
39	MA8	O		89	TERE	I/O	
40	VDD		Power supply	90	VDD		Power supply
41	MA9	O	Wave memory address bus	91	TENR	I/O	Test pin
42	MA10	O		92	TEAE	I/O	
43	MA11	O		93	TEAR	I/O	
44	MA12	O		94	TEOE	I/O	
45	MA13	O		95	TEI2	I	Test pin
46	MA14	O		96	TEI1	I	
47	MA15	O		97	$\overline{IC}$	I	Initial clear
48	MA16	O		98	$\overline{IRQ}$	O	Interrupt request
49	MA17	O		99	M/$\overline{S}$	I	SYNWR in/out control
50	MA18	O		100	$\overline{SYW}$	I/O	Synch signal

• YSF207 (XI976A00) DCF1 (Digital Controlled Filter)

PIN NO.	NAME	I/O	FUNCTION	PIN NO.	NAME	I/O	FUNCTION
1	AVFIK	I	Key on data from AVF	65	IC	I	Initial clear
2	AVFI0	I	Data input from AVF	66	TPAD0	O	Test pin
3	AVFI1	I		67	TPAD1	O	
4	MNSI0	I	Cut-off modulation	68	TPAD2	O	
5	MNSI1	I		69	TPAD3	O	
6	NC		Not used	70	TPAD4	O	
7	NSI0A	I	Input to filter	71	TPAD5	O	
8	NSI0K	I	Key on for DCF input	72	TPAD6	O	
9	NSI0S	I	Input to filter	73	TPAD7	O	
10	NSI1A	I		74	TPAD8	O	
11	NSI1K	I	Key on for DCF input	75	TPAD9	O	
12	NSI1S	I	Input to filter	76	NC		
13	MPTEST	I	Test pin (multiplexer)	77	TPADA	O	
14	MSB/$\overline{\text{LSB}}$	I		78	TPADB	O	
15	V_{SS}		Ground	79	TSTSQCR	I	
16	MPXTST0	I	Test pin (multiplexer)	80	$\overline{\text{IRQ}}$	I	Interrupt request
17	MPXTST1	I		81	NC		Not used
18	MPXTST2	I		82	V_{SS}		Ground
19	MPXTST3	I		83	HCLK	O	Clock
20	MPXTST4	I		84	MCLK	I	Master clock
21	MPXTST5	I		85	SYW1	I	Synch. signal input
22	MPXTST6	I		86	NC		Not used
23	MPXTST7	I		87	SYWoD	O	Synch. signal delay
24	MPXTST8	I		88	SYWo	O	Synch. signal output
25	MPXTST9	I		89	FMSYWo	O	Synch. signal for FM
26	MPXTSTA	I		90	TPADC	O	Test pin
27	MPXTSTB	I		91	TPADD	O	
28	MPYTST0	I		92	TPADE	O	
29	MPYTST1	I		93	TPADF	O	
30	MPYTST2	I		94	TPADG	O	
31	MPYTST3	I		95	TPADH	O	
32	NC		Not used	96	TPADI	O	
33	MPYTST4	I	Test pin (multiplexer)	97	NC		Not used
34	MPYTST5	I		98	NSoK	O	Key on of DCF output
35	MPYTST6	I		99	NSo0	O	Output from filter
36	MPYTST7	I		100	NSo1	O	
37	MPYTST8	I		101	SFM1oC	O	Output to carrier of SFM
38	MPYTST9	I		102	SFM1oK	O	Key on output to SFM
39	MPYTSTA	I		103	SFM1oM	O	Output to modulator of SFM
40	MPYTSTB	I		104	SFM2oK	O	Key on output to SFM
41	MPYTSTC	I		105	SFM2oM	O	Output to modulater of SFM
42	MPYTSTD	I		106	NC		Not used
43	$\overline{\text{CS}}$	I	Chip select	107	AVFoK	O	Key on output to AVF
44	$\overline{\text{RD}}$	O	Read control	108	AVFo0	O	Output to AVF
45	$\overline{\text{WR}}$	O	Write control	109	AVFo1	O	
46	V_{DD}		Power supply	110	AVPoK	O	Key on output to AVP
47	NC		Not used	111	AVPo00	O	Output to AVP
48	A0	I	Address bus	112	AVPo01	O	
49	A1	I		113	V_{DD}		Power supply
50	A2	I		114	AVPo10	O	Output to AVP
51	A3	I		115	AVPo11	O	
52	A4	I		116	PNSi0	I	Rear mixing input
53	A5	I		117	RNSi1	I	
54	A6	I		118	FNSi0	I	Front mixing input
55	D0	I/O	Data bus	119	FNSi1	I	
56	NC		Not used	120	SFM2iO	I	Input from SFM
57	D1	I/O	Data bus	121	SFM2iK	I	Key on input from SFM
58	D2	I/O		122	SFM2iT	I	Through input from SFM
59	D3	I/O		123	SFM1iO	I	Input from SFM
60	D4	I/O		124	SFM1iK	I	Key on input from SFM
61	D5	I/O		125	SFM1iK	I	Through input from SFM
62	D6	I/O		126	AVPiK	I	Key on input from AVP
63	D7	I/O		127	AVPi0	I	Input from AVP
64	NC		Not used	128	AVPi1	I	

■IC BLOCK DIAGRAM

- **SN74LS03NSR** (XI316A00)
  Quad 2 Input NAND

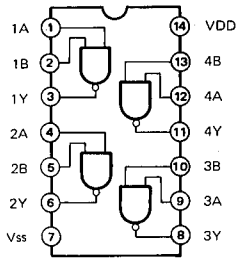

- **SN74AS04NSR** (XI313A00)
- **SN74HC04NSR** (XD830D00)
- **TC74HCT04AF-T1** (XI297A00)
  Hex Inverter

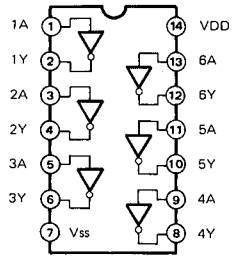

- **SN74HC08NSR** (XD831A00)
  Quad 2 Input AND

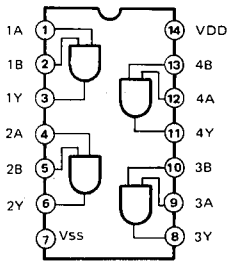

- **SN74HC14NSR** (XC725A00)
  Hex Inverter

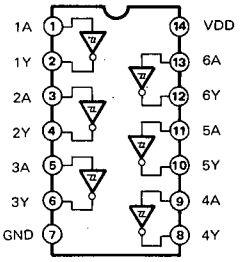

- **SN74AS32NSR** (XI314A00)
- **SN74HC32NSR** (XD833A00)
  Quad 2 Input OR

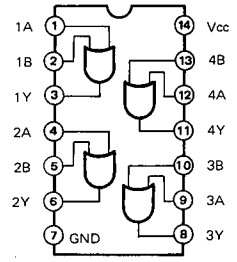

- **SN74HC74NSR** (XC726A00)
  Dual D-Type Flip-Flop

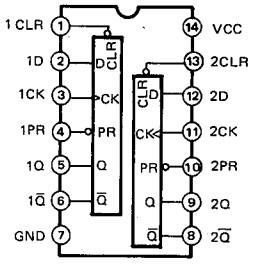

INPUTS				OUTPUTS	
PR	CLR	CLK	D	Q	Q̄
L	H	X	X	H	L
H	L	X	X	L	H
L	L	X	X	H	H
H	H	↑	H	H	L
H	H	↑	L	L	H
H	H	L	X	Q_0	$\bar{Q}_0$

- **SN74HC125NSR** (XH218A00)
  Quad 3-State Bus Buffer

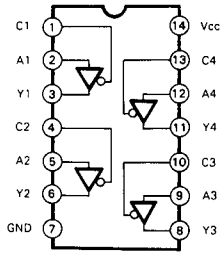

- **SN74HC138NSR** (XD835A00)
  3 to 8 Demultiplexer

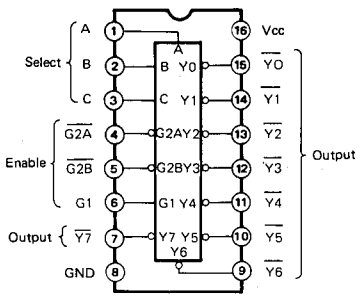

- **SN74HC139NSR** (XC727A00)
  Dual 2 to 4 Demultiplexer

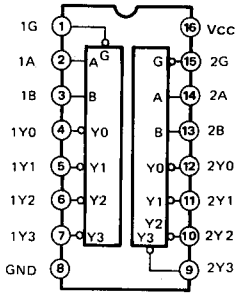

- **SN74HC174NSR** (XD836A00)
  Hex D-Type Flip-Flop

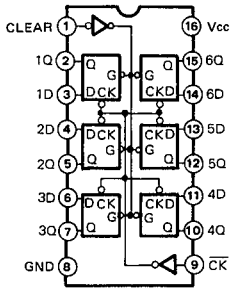

- **SN74HC373NSR** (XG387A00)
- **TC74HCT373AF-T1** (XI296A00)
  Octal 3-State D-Type Latch

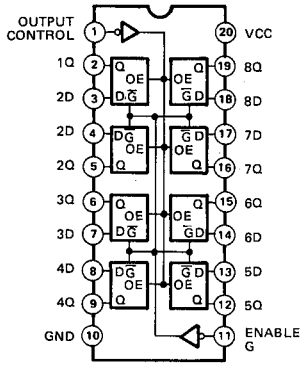

- **TC74HC393AF-TP1** (XE052A00)
  Dual 4-Bit Binary Counter

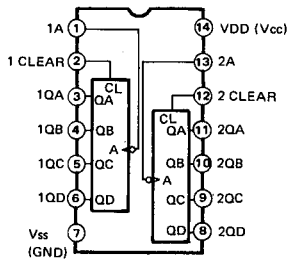

- **SN74AC11000NSR** (XI308A00)
  Quad 2 Input NAND

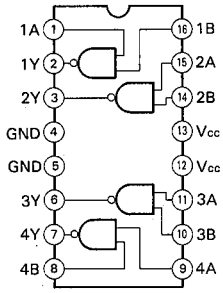

- **SN74AC11008NSR** (XI310A00)
  Quad 2 Input AND

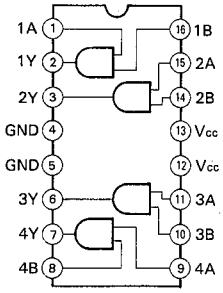

- **SN74AC11011NSR** (XI307A00)
  Triple 3 Input AND

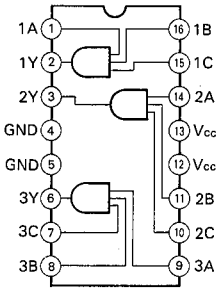

- **SN74AC11032NSR** (XI309A00)
  Quad 2 Input OR

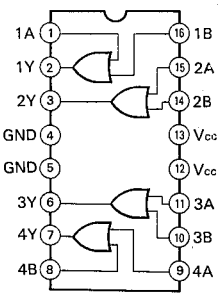

- **SN74AC11074NSR** (XI974A00)
  Dual D-Type Flip-Flop

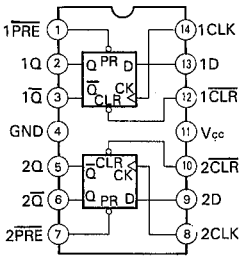

- **SN74AC11138NSR** (XI312A00)
  3 to 8 Decoder/Demultiplexer

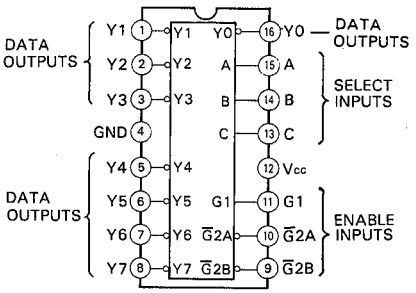

- **SN74AC11244NSE** (XI311A00)

Octal 3-State Bus Buffer

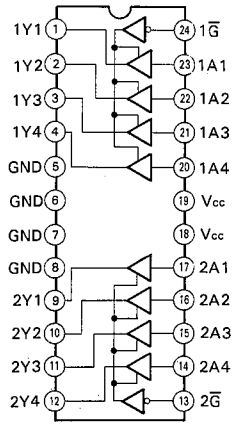

- **TC4050BF (TP1)** (XJ120A00)
- **TC4050BP** (IG001740)
- **TC74HC4050AF-T1** (XI299A00)

Hex Buffer/Converter

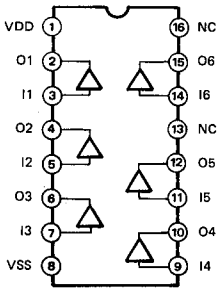

- **M5201P** (XJ223A00)

Switch Operational Amplifier

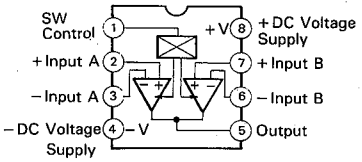

- **NJM4556** (IG042500)
- **NJM4558MT-1** (IG103520)
- **NJM4560M (T1)** (XA862B00)
- **RC4558DV** (IG001390)

Dual Operational Amplifier

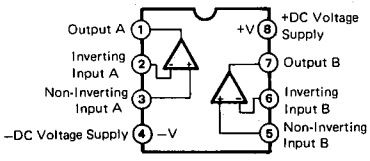

- **NJM4558S** (IG076800)

Dual Operational Amplifier

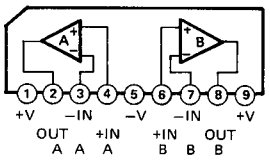

- **T6400 (S)** (IG079500)

Clock Buffer

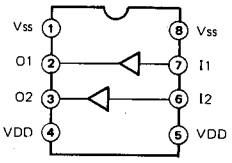

■MIDI SPECIFICATIONS

■CHANNEL MESSAGES

Date Jan 22, '91
Version: 1.1

Code	Function	Transmitted	Recognized	Remarks
8nH, nnH (Note No.), 00H-7FH	Note OFF	× × × × ×	CH 1 CH 2 CH 3 (CH 4)* CH 15	UK LK PK LEAD Keyboard Percussion
9nH, nnH (Note No.), 01H-7FH (ON) 00H (OFF)	Note On/OFF	CH 1 CH 2 CH 3 (CH 4)* (CH 5)* ×	CH 1 CH 2 CH 3 (CH 4)* × CH 15	UK LK PK LEAD Keyboard Percussion
BnH, 04H, 00H-7FH	2nd Expression Pedal	(CH 4)* CH 16	(CH 4)* CH 16	LEAD CONTROL
BFH, 0BH, 00H-7FH	Expression Pedal	CH 16	CH 16	CONTROL
BnH, 40H, 7FH (ON) 00H (OFF)	Sustain ON/OFF	× × ×	× × ×	UK LK PK
BnH, 7BH, 00H	All Note OFF	× × × × ×	× × × × ×	UK LK PK LEAD CONTROL
CnH, nnH (Regist. No.)	Program Change (Registration Memory)	× × × CH 16	CH 1 CH 2 CH 3 CH 16	UK LK PK CONTROL
DnH, 00H-7FH	After Touch	CH 1 CH 2 CH 3 (CH 4)*	CH 1 CH 2 CH 3 (CH 4)*	UK LK PK LEAD

* Can be replaced by MIDI CONTROL function.

■SYSTEM REALTIME MESSAGES

Code	Function	Transmitted	Recognized	Remarks
F8H	Clock	○	○*	* Recognize = Ext. mode
FAH	Start	○	○	
FCH	Stop	○	○	
FEH	Active Sensing	○	○	
FFH	Reset	×	×	

1. Electone common messages

■BULK DUMP Related Messages

Code	Messages	Transmitted	Recognized
F0H, 43H, 70H, 70H, 00H, ... (data) ....., F7H	Bulk Dump data	×	○
01H	Request-to-Send Voice Parameter data	×	○
02H	Request-to-Receive Voice Parameter data	×	○
F0H, 43H, 70H, 70H, 10H, F7H	Request-to-Send all RAM data	×	○
11H	Request-to-Send Registration data	×	○
12H	Request-to-Send R.S.P. data	×	○
14H	Request-to-Send User pattern data	×	○
15H	Request-to-Send User pattern data	×	○
16H	Request-to-Send USER Voice data	×	○
F0H, 43H, 70H, 70H, 20H, F7H	Request-to-Receive all RAM data	×	○
21H	Request-to-Receive Registration data	×	○
22H	Request-to-Receive R.S.P. data	×	○
24H	Request-to-Receive User Pattern data	×	○
25H	Request-to-Receive User Pattern data	×	○
26H	Request-to-Receiver USER Voice data	×	○
F0H, 43H, 70H, 70H, 30H, F7H	Request-to-Send Model ID data	×	○
F0H, 43H, 70H, 70H, 38H, 7FH, F7H 00H	Bulk Dump Acknowledge Unacknowledge	○ ○	× ×

■CONTROL CHANGE

Code	Messages		Transmitted	Recognized
F0H, 43H, 70H, 70H, 40H, 45H, 7FH, F7H 00H	FOOT SWITCH LEFT	ON OFF	○ ○	○ ○
40H, 47H, 7FH, F7H 00H	KNEE LEVER	ON OFF	○ ○	○ ○
40H, 48H, 7FH, F7H 00H	FILL IN	ON OFF	○ ○	○ ○
40H, 48H, 7FH, F7H 00H	INTRO./ENDING	ON OFF	○ ○	○ ○
40H, 50H, TLH, THH, F7H	TEMPO		○	○

■MDR STATUS

Code	Messages		Transmitted	Recognized
F0H, 43H, 70H, 70H, 70H, 01H, 7FH 02H	PLAY	Start Stop	× ×	○ ○
03H 04H	RECORD	Start Stop	× ×	○ ○
05H 06H	FF ▶▶	Start Stop	× ×	○ ○
	Rhythm Pointer Reset		×	○

■OTHERS

Code	Messages	Transmitted	Recognized
F0H, 43H, 70H, 70H, 78H, SCH, NCH, F7H	Bar signal	○	○

2. EL-90/70 common message

Code	Messages	Transmitted	Recognized
F0H, 43H, 70H, 78H, 00H, ... (data) ....., F7H	Bulk Dump data	○	○
01H	Request-to-Send Voice Parameter data	×	○
02H	Request-to-Receive Voice Parameter data	×	○
F0H, 43H, 70H, 78H, 10H, F7H	Request-to-Send all RAM data	×	○
11H	Request-to-Send Registration data	×	○
12H	Request-to-Send R.S.P. data	×	○
14H	Request-to-Send User pattern data	×	○
15H	Request-to-Send User pattern data	×	○
16H	Request-to-Send USER Voice data	×	○
F0H, 43H, 70H, 78H, 20H, F7H	Request-to-Receive all RAM data	×	○
21H	Request-to-Receive Registration data	×	○
22H	Request-to-Receive R.S.P. data	×	○
24H	Request-to-Receive User Pattern data	×	○
25H	Request-to-Receive User Pattern data	×	○
26H	Request-to-Receive USER Voice data	×	○
F0H, 43H, 70H, 78H, 41H, ...(data)....., F7H	Panel Switch Event data *1	○	○
F0H, 43H, 70H, 78H, 42H, ... (data) F7H	Current Registration data	○	○

*1 Refer to the "Table of Switch-Related MIDI Codes."

● Table of SW MIDI codes [F0H, 43H, 70H, 78H, 41H, CODE, DATA, F7H]

Switch Code

Functions/Switches		Code	Data	Remarks
Selector	UK Voice 1	02H	00H-0DH	SW no.
	LK Voice 1	03H	00H-0DH	SW no.
	UK Voice 2	04H	00H-0DH	SW no.
	LK Voice 2	05H	00H-0DH	SW no.
	Lead	06H	00H-04H	SW no.
	PK Bass 1	07H	00H-04H	SW no.
	PK Bass 2	08H	00H-04H	SW no.
	Rhythm	0BH	00H-0BH	SW no.
Volume	UK Voice 1	12H	00H-7FH	Volume data
	LK Voice 1	13H	00H-7FH	Volume data
	UK Voice 2	14H	00H-7FH	Volume data
	LK Voice 2	15H	00H-7FH	Volume data
	Lead	16H	00H-7FH	Volume data
	PK Bass 1	17H	00H-7FH	Volume data
	PK Bass 2	18H	00H-7FH	Volume data
	Rhythm	1AH	00H-7FH	Volume data
	Reverb	1BH	00H-7FH	Volume data
Flute Voice	Upper	30H	00H-01H	00H = Off 01H = On
	Lower	31H	00H-01H	00H = Off 01H = On
To Lower	Lead	36H	00H-01H	00H = Off 01H = On
	PK Bass 1	37H	00H-01H	00H = Off 01H = On
	PK Bass 2	38H	00H-01H	00H = Off 01H = On
Brilliance	UK Voice 1	42H	00H-06H	00H = Brilliant 06H = Mellow
	LK Voice 1	43H	00H-06H	00H = Brilliant 06H = Mellow
	UK Voice 2	44H	00H-06H	00H = Brilliant 06H = Mellow
	LK Voice 2	45H	00H-06H	00H = Brilliant 06H = Mellow
	Lead	46H	00H-06H	00H = Brilliant 06H = Mellow
	PK Bass 1	47H	00H-06H	00H = Brilliant 06H = Mellow
	PK Bass 2	48H	00H-06H	00H = Brilliant 06H = Mellow
Sustain	UK Sustain	50H	00H-01H	00H = Off 01H = On
	LK Sustain	51H	00H-01H	00H = Off 01H = On
	PK Sustain	52H	00H-01H	00H = Off 01H = On
Keyboard Percussion	LK	5BH	00H-01H	00H = Off 01H = On
	PK	5CH	00H-01H	00H = Off 01H = On
Disable	Disable	5FH	00H-01H	00H = Off 01H = On
Tremolo	Tremolo	60H	00H-01H	00H = Chorus 01H = Tremolo
R.S.P.	1	61H	00H-01H	00H = Off 01H = On
	2	62H	00H-01H	00H = Off 01H = On
	3	63H	00H-01H	00H = Off 01H = On
	4	64H	00H-01H	00H = Off 01H = On

3. Model-Specific messages

Code	Messages	Transmitted	Recognized
F0H, 43H, 70H, nnH, 00H, ... (data) ....., F7H	Bulk Dump data	×	○
nnH, 00H	Model ID data	○	×
nnH, 01H,	Request-to-Send Voice Parameter data	×	○
nnH, 02H	Request-to-Receive Voice Parameter data	×	○
F0H, 43H, 70H, nnH, 10H, F7H	Request-to-Send all RAM data	×	○
11H	Request-to-Send Registration data	×	○
12H	Request-to-Send R.S.P. data	×	○
14H	Request-to-Send USER Pattern data	×	○
15H	Request-to-Send USER Pattern data	×	○
16H	Request-to-Send USER Voice data	×	○
F0H, 43H, 70H, nnH, 20H, F7H	Request-to-Receive all RAM data	×	○
21H	Request-to-Receive Registration data	×	○
22H	Request-to-Receive R.S.P. data	×	○
24H	Request-to-Receive USER Pattern data	×	○
25H	Request-to-Receive USER Pattern data	×	○
26H	Request-to-Receive USER Voice data	×	○

"nnH" can be sent/received by $35 (E-70) or $36 (EL-90).

4. Electone/Single Keyboard common messages

Code	Messages	Transmitted	Recognized
F0H, 43H, 73H, 01H, 02H, F7H	Request for Internal Synchronous mode	×	○
03H	Request for External Synchronous mode	×	○

MIDI Implementation Chart

Date Jan 22, '91
Version: 1.1

Function		Transmitted	Recognized	Remarks
Basic Channel	Default	1 2 3 16	1 2 3 15 16	UK LK PK Keyboard Percussion CONTROL
	Changes	4 5	 4	UK LK LEAD
Mode	Default Messages Altered	Mode 3 × * * * * * * * * * * * * *	Mode 3 × ×	
Note Number	 True Voice	48-96 36-84 36-55 × × * * * * * * * * * * * * *	36-96 36-96 36-96 36-96 36-127 36-96	UK LK PK LEAD Keyboard Percussion UK, LK, PK
Velocity	Note ON Note OFF	○ 9nH, v = 1-127 ○ 9nH, v = 0	○ 9nH, v = 1-127 ○ 9nH, v = 0, 8nH	
After Touch	Key's Ch's	× ○	× ○	
Pitch Bender		×	×	
Control Change	1 4 11 64	× ○ ○ ×	× ○ ○*** ×	Modulation wheel 2nd Expression pedal Expression pedal Sustain
Program Change	 Range	0-15 (0-7) * 112-116 * * * * * * * * * * * * *	0-15 (0-7) * 112-116 0-15 (0-7) *	
System Exclusive		○ * *	○ * *	
System Common	Song Pos Song Sel Tune	× × ×	× × ×	
System Real Time	Clock Commands	○ ○	○ * * * ○	 (FAH, FCH)
Aux Messages	Local ON/OFF All Notes OFF Active Sense Reset	× × ○ ×	× × ○ ×	
Notes		* 0-15 = EL-90, 0-7 = EL-70 ** Refer to MIDI Specifications *** Recognize only when External mode		

Mode 1: OMNI ON, POLY Mode 2: OMNI ON, MONO
Mode 3: OMNI OFF, POLY Mode 4: OMNI OFF, MONO

○: YES
×: NO

■ TEST PROGRAM

A. HOW TO ENTER THE TEST PROGRAM

While pressing [C#2], [F2] and [G#2] keys of the lower keyboard, turn on the power. The Electone EL90/EL70 will indicate that you have entered the test program mode by displaying the following message.

EL90 SELF CHECK MODE							
(C) '91/03/13 V.4.2(MAIN) V.5.0(MDRI)							
RAM CHECK		R.TON CHECK	TOUCH CHECK	LED CHECK	SW CHECK		SEMI CHECK
FDD CHECK	MIDI CHECK	LEVEL CHECK	EXP. CHECK	LCD CHECK	LED CHECK		CHECK END

Use the data control switches to select the appropriate test mode.

B. HOW TO EXIT THE TEST PROGRAM

To exit the test program mode, select the [CHECK END].

1 RAM TEST

Performs a read/write test of RAM.

DISPLAY OF TEST RESULTS

RAM
OK./

2 FDD TEST

Use a blank disk to test the disk format. Insert a blank disk with the write protect off and press the [▽]switch to execute the test. Check that the SONG SELECT display will indicate from "160" through "001" then "PASS".

DISPLAY OF TEST RESULTS

FDD
OK./

3 MIDI TEST

After connecting the MIDI IN to the MIDI OUT via a MIDI cable, execute the test.

DISPLAY OF TEST RESULTS

MIDI
OK./

4 RHYTHM SOUND OUTPUT TEST

Check that the correct signal is output.
This unit has seventy five (75) kinds of rhythm sound sources. When the test is initiated, the entire rhythm sound sources will be output in succession. The volume control must be set at a comfortable listening level for this test.

5 OUTPUT LEVEL TEST

Check that signals are properly output. Each time the data control switch is pressed, the next voice will be heard. While sounding, the LCD will display the voice group name that is currently output. The volume controls must be set to maximum, and the balance and brilliance controls must be set at center. (Effects must be off.)

Listed below are the specifications and conditions of each output during this test.
LK VOICE 1:C3, test signal, −5.5±2dBm at HEADPHONES(L/R), −20.0±0.5dBm at AUX. OUT(L/R)

LK VOICE 2: C3, test signal, −5.5±2dBm at HEADPHONES(L/R), −20.0±0.5dBm at AUX. OUT(L/R)

UK VOICE 1: C3, test signal, −5.5±2dBm at HEADPHONES(L/R), −20.0±0.5dBm at AUX. OUT(L/R)

UK VOICE 2: C3, test signal, −5.5±2dBm at HEADPHONES(L/R), −20.0±0.5dBm at AUX. OUT(L/R)

LEAD: C3, test signal, −1.2±2dBm at HEADPHONES(L/R), −15.7±2dBm at AUX. OUT(L/R)

PK VOICE 1: G1, test signal, +0.7±2dBm at HEADPHONES(L/R), −15.7±2dBm at AUX. OUT(L/R)

PK VOICE 2: G1, test signal, +0.7±2dBm at HEADPHONES(L/R), −15.7±2dBm at AUX. OUT(L/R)

REVERB: C3, test signal, −1.2±2dBm at HEADPHONES(L/R), −15.7±2dBm at AUX. OUT(L/R)

RHYTHM: Buss drum signal, −0.7±2dBm at HEADPHONES L, +2.2±2dBm at HEADPHONES R, −15.0dBm±2dB at AUX. OUT L, −12.5±2dBm at AUX. OUT R

ACCOMPANIMENT: Test signal, +0.5dBm±2dB at HEADPHONES(L/R), −14.0±2dBm at AUX. OUT(L/R)

Use VR1 and VR2 on the ANG circuit board to adjust the output level during LK VOICE 1 check. VR1 is used for L channel output level adjustment, VR2 for R channel.

6 KEYBOARD TEST

Play a scale on the keyboard. The TEMPO display will indicate the key velocity and key pressure (in other words, initial touch level and after touch level).

DISPLAY OF TEST RESULTS [ii aa]
(where ii = current value of key velocity, aa are the value of key pressure)

7 EXP. PEDAL CHECK

Slowly move the exp. pedal and the 2nd exp. pedal.
Check that the number on the TEMPO display changes from 00 through 7F (in other words, starting from the raised position then to the lowered position).

DISPLAY OF TEST RESULTS [ff ss]
(where ff = current exp. pedal value, ss are the 2nd exp. pedal values)
The 2nd exp. pedal value at the beginning is "40" (at center).

8 LED TEST 1

Check that all red LEDs blink together.

9 LCD TEST

Check that all dots of the LCD turn ON and OFF (blink).

10 PANEL SWITCH TEST

Press the panel switches consecutively. If the switch is OK, the value indicated on the SONG SELECT display will decrease. The display will indicate "0", if all switches are good. The indicated value at the beginning is "282" on a EL-90 and "254" on a EL-70.

HOW TO EXIT THE PANEL SWITCH TEST
While pressing [C♯2], [F2] and [G♯2] keys of the lower keyboard, select the other test.

11 LED TEST 2

Check that each LED blinks once in succession from the left end of the unit.

CIRCUIT BOARDS CONTENTS

EL-90

DM CIRCUIT BOARD
Components side, Pattern side 38
ROM2 CIRCUIT BOARD
Components side, Pattern side 43
ROM1 CIRCUIT BOARD
Components side, Pattern side 46
PN1,PN3,PN4 CIRCUIT BOARD
Components side, Pattern side 48
ANG CIRCUIT BOARD 52
PN2,PS1,PS2 CIRCUIT BOARD 54
CP2 CIRCUIT BOARDS
Components side, Pattern side 56
CP1 CIRCUIT BOARD
Components side, Pattern side 58
RA,AUX,HP CIRCUIT BOARD 59
CP3,CP4,MVR CIRCUIT BOARD
Components side, Pattern side 60
EF CIRCUIT BOARD
Components side, Pattern side 64
MIC CIRCUIT BOARD 66
MIDI,PRM,EXP,KNELEV CIRCUIT BOARD 67
MDR,LCD CIRCUIT BOARD
Components side, Pattern side 68
MK CIRCUIT BOARD 70
PKL,PKH CIRCUIT BOARD 72
PU,FU CIRCUIT BOARD 74

EL-70

DM CIRCUIT BOARD
Components side, Pattern side 76
ROM1 CIRCUIT BOARD
Components side, Pattern side 81
MIDI, PRM, EXP, KNELEV CIRCUIT BOARD 83
ANG CIRCUIT BOARD 84
PN1,PN3,PN4 CIRCUIT BOARD
Components side, Pattern side 86
CP2 CIRCUIT BOARD
Components side, Pattern side 90
CP1 CIRCUIT BOARD
Components side, Pattern side 92
RA, AUX, HP CIRCUIT BOARD
Components side, Pattern side 93
CP3,CP4, MVR CIRCUIT BOARD
Components side, Pattern side 94
PN2,PS1,PS2 CIRCUIT BOARD 98
MDR,LCD CIRCUIT BOARDS
Components side, Pattern side 100
MK CIRCUIT BOARD 102
PKL,PKH CIRCUIT BOARD 104
PU,FU CIRCUIT BOARD 106

EL-90/EL-70

■CIRCUIT BOARDS

● DM Circuit Board (EL-90) —Components side

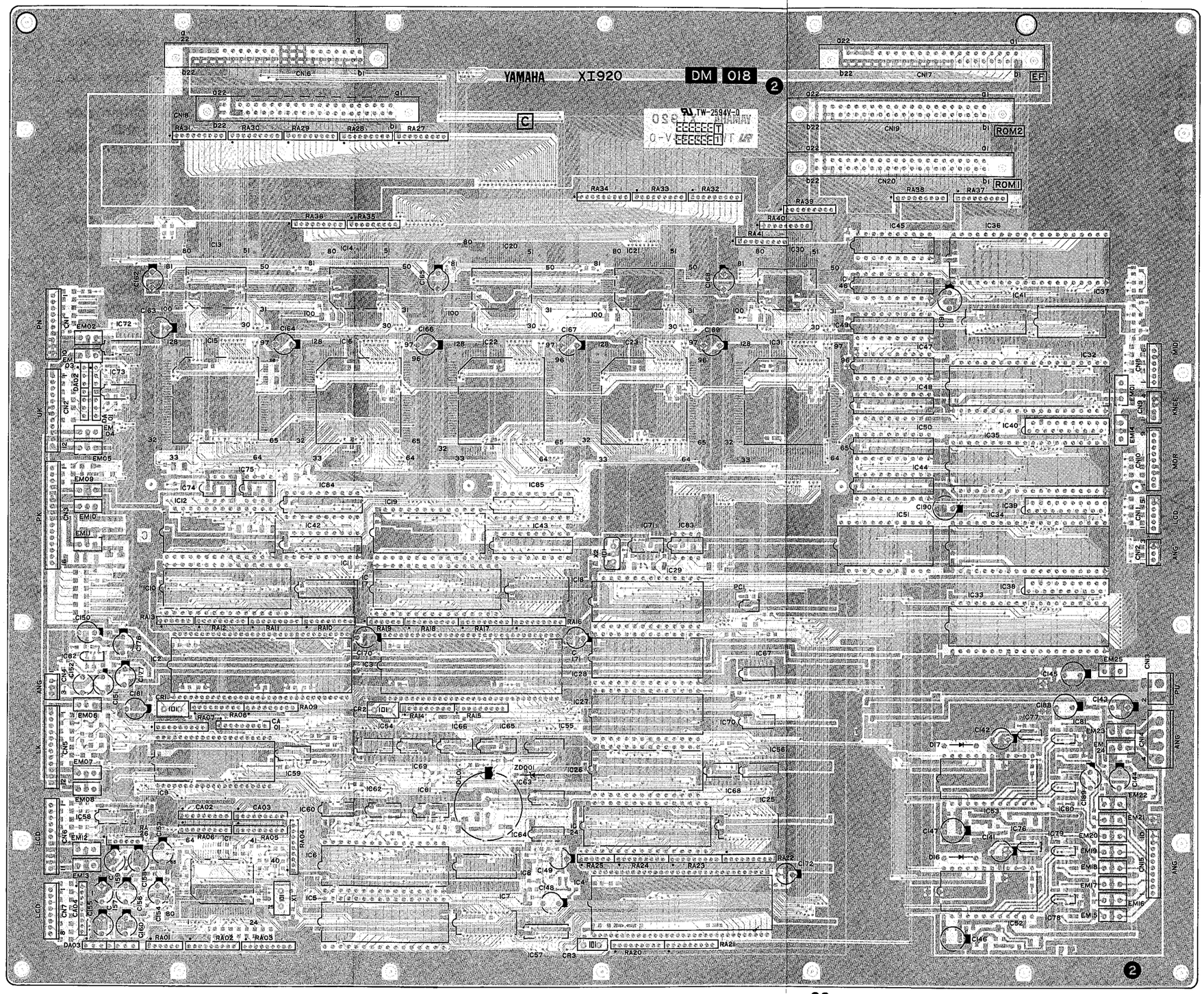

EL-90/EL-70

● DM Circuit Board (EL-90)—Pattern side

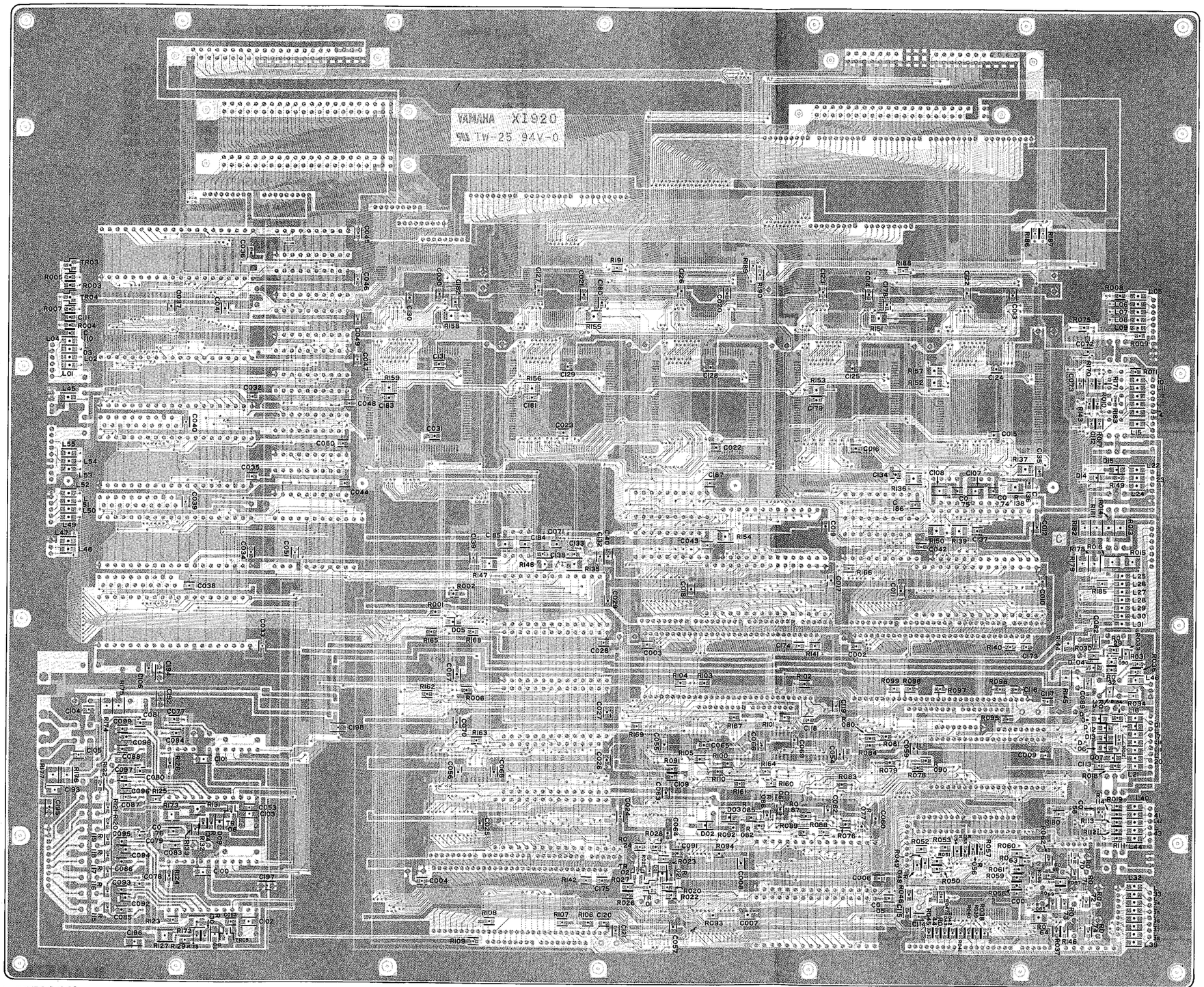

	Circuit Board:	DM (VK747800) XI920C0 Japanese model S/# 1001~
		DM (VK836600) XJ002D0 (4)
1.	IC	
	IC 1:	M37700SAFP (XI286A00) CPU
	IC 2~4:	HD63C03YP (XB529A00) MPU
	IC 5:	(XJ811B00) MASKROM MAIN
	IC 6:	(XJ127C00) MASKROM BANK
	IC 7,8,11,18:	μPD43256AGU (XH688A00) SRAM 1M
	IC 9:	TC17G005AN-0023 (XB809A00) MI-1
	IC10,17:	TC531000CP-H094 (XJ128F00) M.ROM SLAVE1
	IC12,19,26~29:	YM7131 (XH236A00) OPLZ
	IC13,14,20,21,30:	YM7132 (XH235B00) OPWZ
	IC15,16,22,23:	YSF207 (XI976A00) DCF1
	IC24:	(XJ130D00) MASKROM SLAVE 3
	IC25:	TC5565AFL-10 (XJ122A00) SRAM 64K
	IC32,36:	YM3413 (XE449A00) LDSP
	IC33~35:	YM3440 (XH238A00) LEF2
	IC37:	HM658128DFP-10 (XI295A00) PSRAM
	IC38~40:	M5M4464AL-10 (XE070A00) DRAM 256K
	IC41:	TC51832FL-10 (XI021A00) PSRAM 256K
	IC42~50,84,85:	TMC57800N (XG662A00) MIX5
	IC51:	YM2406 (XA804A00) DFL
	IC52,53:	YM3028 (XE789A00) DAL2
	IC54~56:	SN74HC138NSR (XD835A00) DECODER
	IC57:	SN74HC373NSR (XG387A00) D.LATCH
	IC58:	SN74HC174NSR (XD836A00) D.FF
	IC59:	SN74AS04NSR (XI313A00) INVERTER
	IC60~62:	SN74AS32NSR (XI314A00) OR
	IC63:	SN74LS03NSR (XI316A00) NAND
	IC64:	SN74HC14NSR (XC725A00) INVERTER
	IC65:	SN74AC11011NSR (XI307A00) AND
	IC66:	SN74HC32NSR (XD833A00) OR
	IC67:	SN74HC04NSR (XD830A00) INVERTER
	IC68,69,73:	SN74HC08NSR (XD831A00) AND
	IC70:	SN74HC74NSR (XC726A00) D.FF
	IC71:	SN74AC11074NSR (XI974A00) D.FF
	IC72:	TC74HC4050AF-T1 (XI299A00) BUFFER
	IC74,75,83:	T6400(S) (IG079500) DRIVER
	IC76,77:	NJM4560M(T1) (XA862B00) OP AMP.
	IC78~82:	NJM4558MT-1 (IG103520) OP AMP.
2.	Photo Coupler	
	PC 1:	PC-400Z (VJ927500)
3.	Transistor	
	TR01:	2SA1162 O,Y (VJ927200)
	TR02~06:	2SC2712 Y (VJ927100)
4.	Diode	
	D01~15:	RLS-73 (VB797600)
		11ES4 (VB481900)
5.	Diode Array	
	DA 1,3:	DAN601 0.025A×6 (VH306300)
	DA 2:	DAP601 0.025A×6 (VH306400)
6.	Zener Diode	
	ZD001:	MTZ5.6B 5.6V (VI993500)
7.	Resistor Array	
	RA01,13,19,25:	RGLE5X103J (VK860600) 10K×5
	RA02~12,14~18,	
	20~24,27~41:	RGLE8X103J (VF771900) 10K×8
	RA26:	RGLE5X104J (VK860700) 100K×5
8.	Electrolytic Cap.	
?	C143,144,146,	
	147,188,189:	220μF 16V (UJ838220)
	C145,161:	220μF 6.3V (UJ818220)
	C154:	470μF 6.3V (UJ818470)
9.	Gold Cap.	
	DL01:	1.0F 5.5V (VH604600)
10.	Ceramic Cap. Array	
	CA01~03:	100pF×8 50V M (VH484100)
	CA04:	220pF×8 50V M (VJ944300)
11.	LC Filter	
	EM 1~25:	DSS306-93F223Z1 22000p (VD542700)
12.	Ceramic Resonator	
	CR 1~3:	12.0MHz (QU007700)
13.	Quartz Crystal Unit	
	X 1:	AT-49/12.0MHz (VE463500)
	X 2:	25.6MHz DOC-492 (VK634300)
14.	Chip Inductor	
	L01~55:	BLM32A06 (VJ928500)

EL-90/EL-70

EL-90/EL-70

● ROM2 Circuit Board (EL-90) —Components side

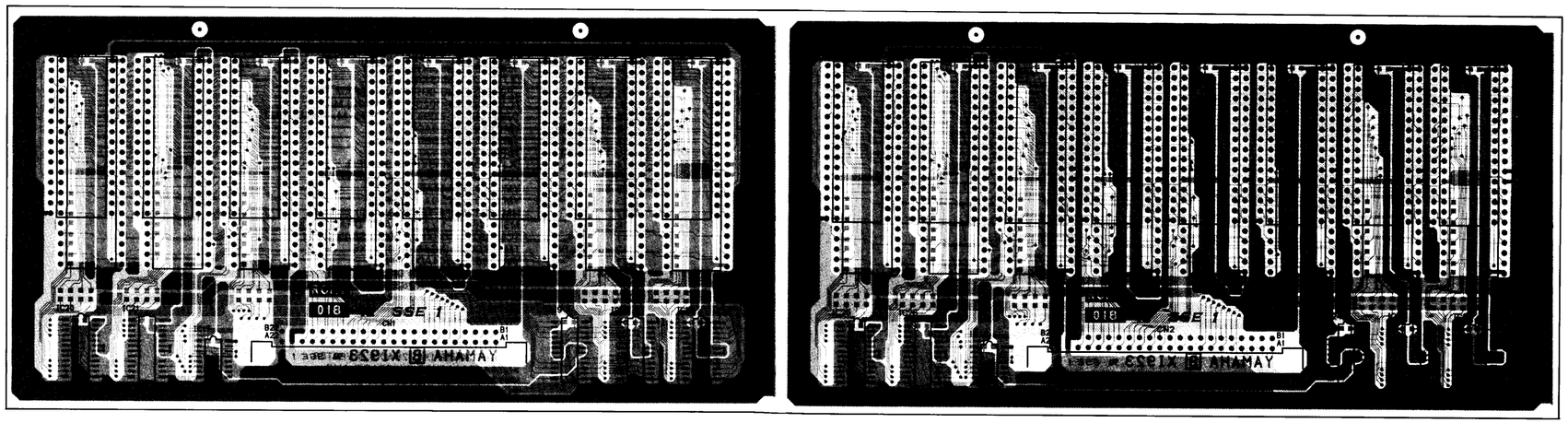

● ROM2 Circuit Board (EL-90) —Pattern side

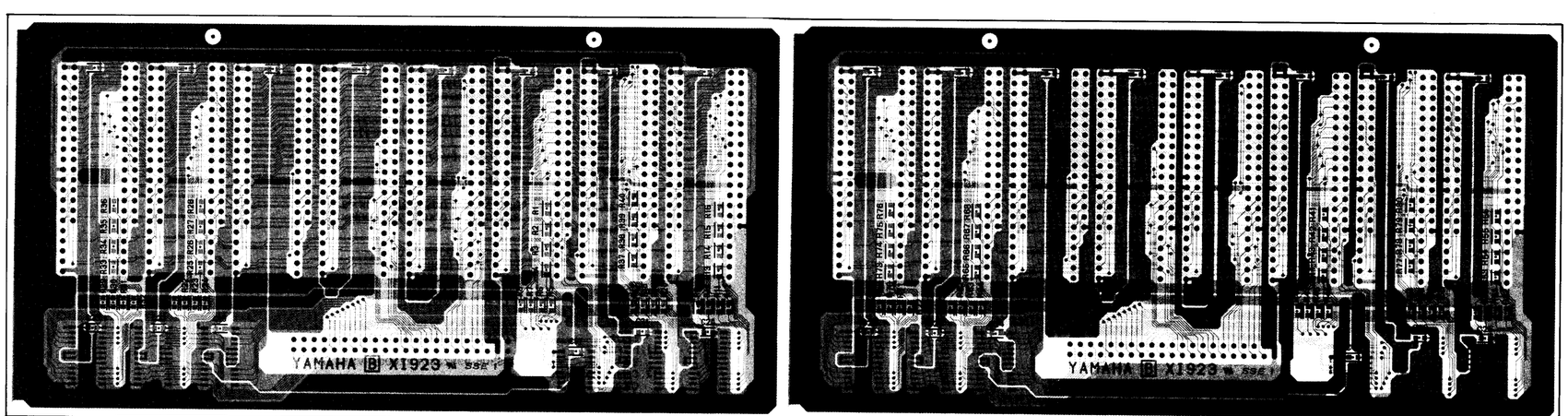

Circuit Board: ROM2 (VK748200) XI923B0 Japanese model S/# 1001~
ROM2 (VK837300) XJ005C0 (4)

1. IC

IC 1:	HN62408PD64 (XJ180C00) MASKROM AWM1 8M
IC 2:	HN62408PD65 (XJ181C00) MASKROM AWM2 8M
IC 3:	HN62408PD66 (XJ182C00) MASKROM AWM3 8M
IC 4:	HN62408PD67 (XJ183C00) MASKROM AWM4 8M
IC 5:	HN62408PD68 (XJ184C00) MASKROM AWM5 8M
IC 6:	HN62408PD69 (XJ185C00) MASKROM AWM6 8M
IC 7:	HN62408PD70 (XJ186C00) MASKROM AWM7 8M
IC 8:	HN62408PD71 (XJ187C00) MASKROM AWM8 8M
IC 9:	LH53803A (XJ188C00) MASKROM AWM9 8M
IC10:	LH53803B (XJ189C00) MASKROM AWM10 8M
IC11:	LH53803D (XJ190C00) MAKSROM AWM11 8M
IC12:	LH53803H (XJ191C00) MASKROM AWM12 8M
IC13:	LH53803J (XJ192C00) MASKROM AWM13 8M
IC14:	LH53803L (XJ193C00) MASKROM AWM14 8M
IC15:	LH53803S (XJ194C00) MASKROM AWM15 8M
IC16:	LH53803Y (XJ195C00) MASKROM AWM16 8M
IC17,18:	SN74HC139NSR (XC727A00) DECODER
IC19~28:	SN74AC11244NSE (XI311A00) BUS BUFFER

● ROM1 Circuit Board (EL-90) —Components side

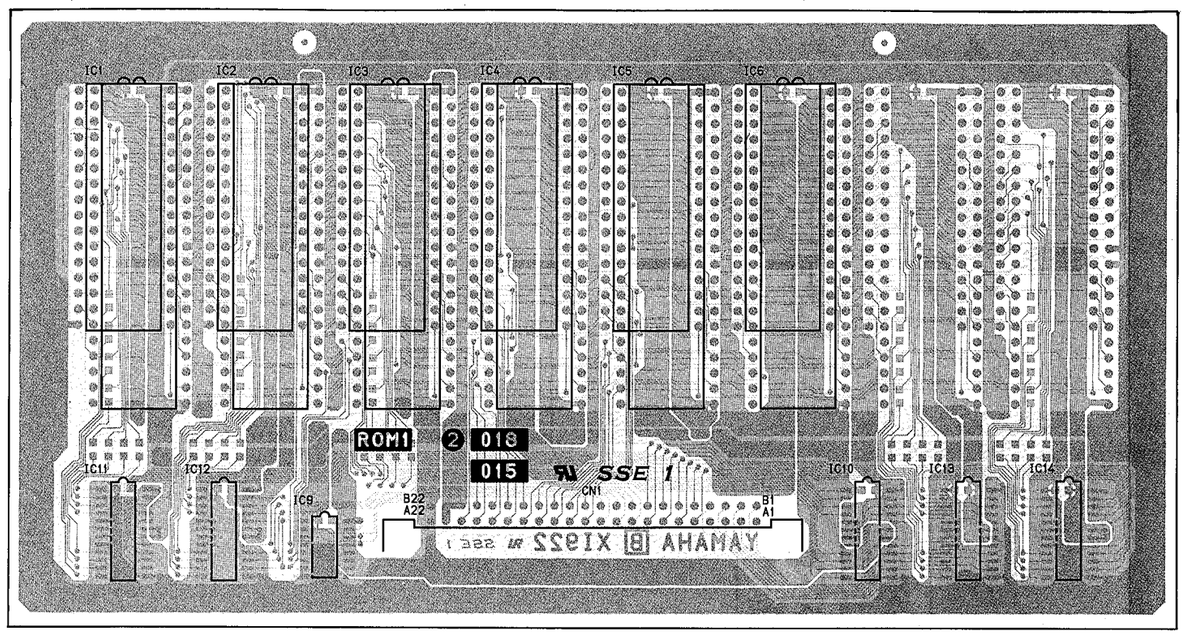

● ROM1 Circuit Board (EL-90)—Pattern side

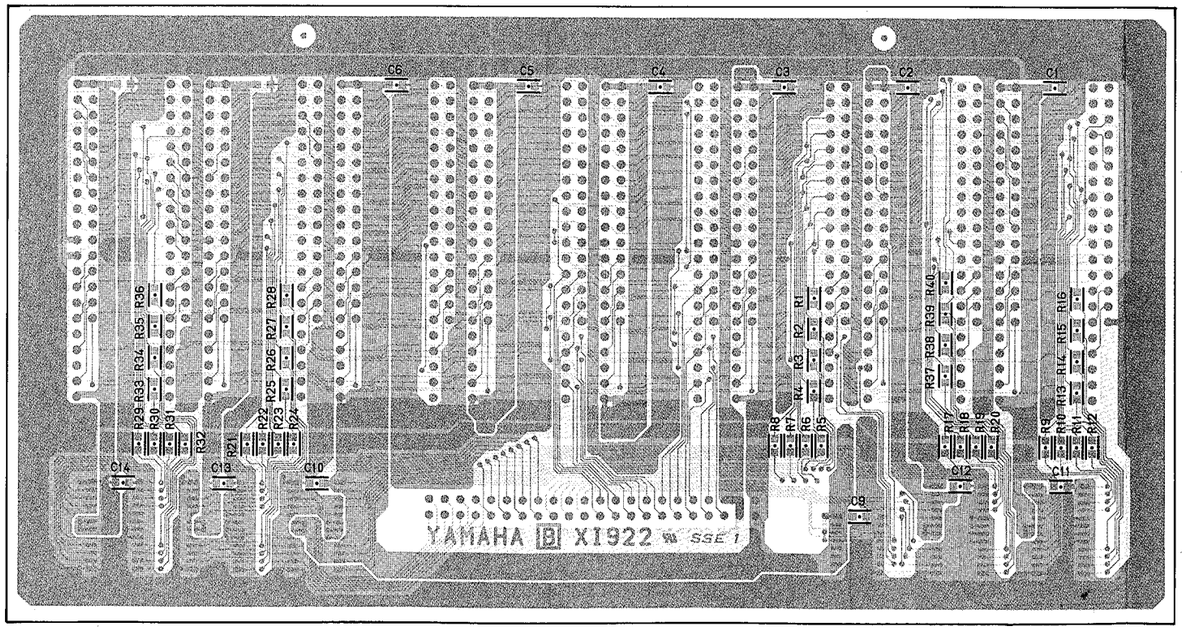

2NA-VK74810 ⚠⚠

Circuit Board: ROM1 (VK748000) XI922B0 Japanese model S/# 1001～
ROM1 (VK836900) XJ004C0 (4)

1. IC

IC 1:	TC538200P-H091 (XJ172C00) MASKROM RHY1 8M
IC 2:	TC538200P-H092 (XJ173C00) MASKROM RHY2 8M
IC 3:	TC538200P-H090 (XJ174C00) MASKROM RHY3 8M
IC 4:	MS31800320PC366 (XJ175C00) MASKROM RHY4 8M
IC 5:	MS31800320PC367 (XJ176C00) MASKROM RHY5 8M
IC 6:	MS31800320PC368 (XJ177C00) MASKROM RHY6 8M
IC 9:	SN74HC139NSR (XC727A00) DECODER
IC10～14:	SN74AC11244NSE (XI311A00) BUS BUFFER

● PN1 Circuit Board (EL-90) — Components side

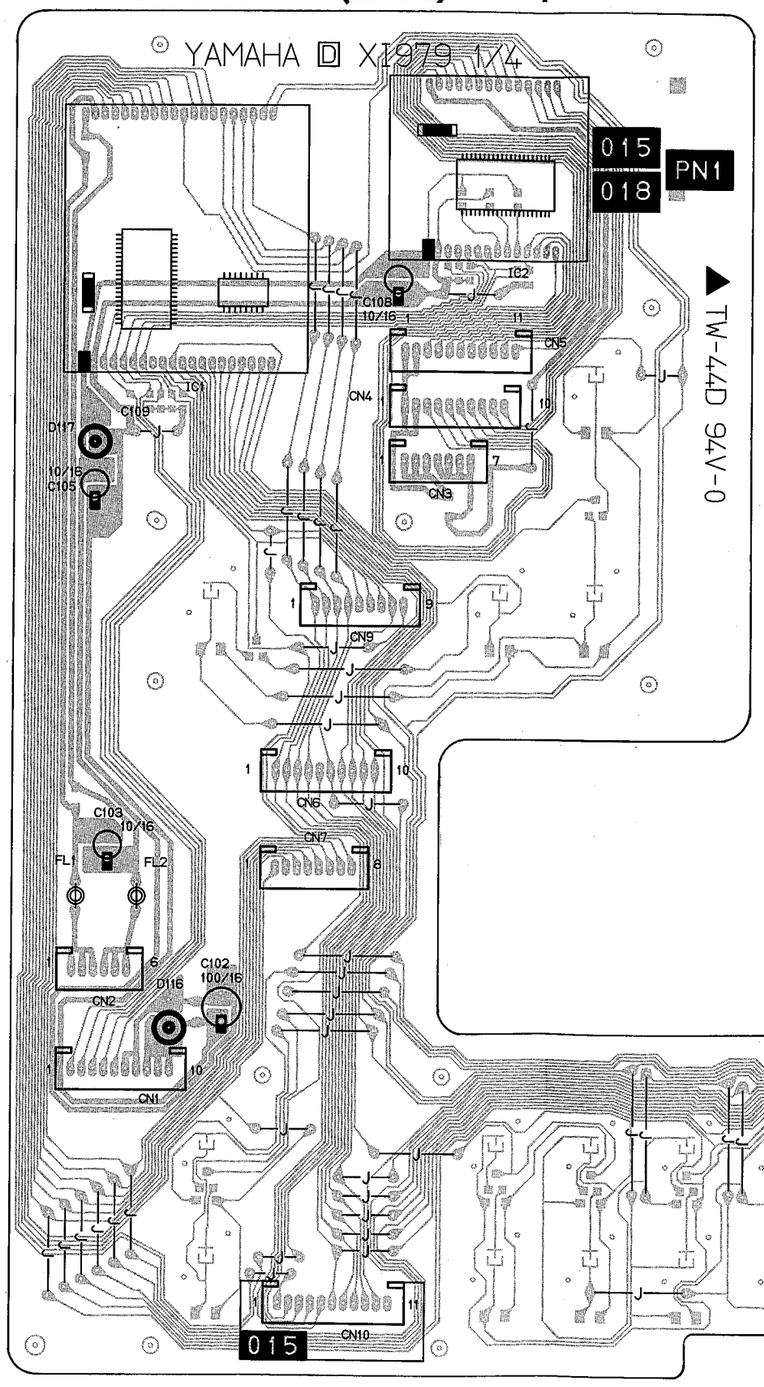

● PN4 Circuit Board (EL-90) — Components side

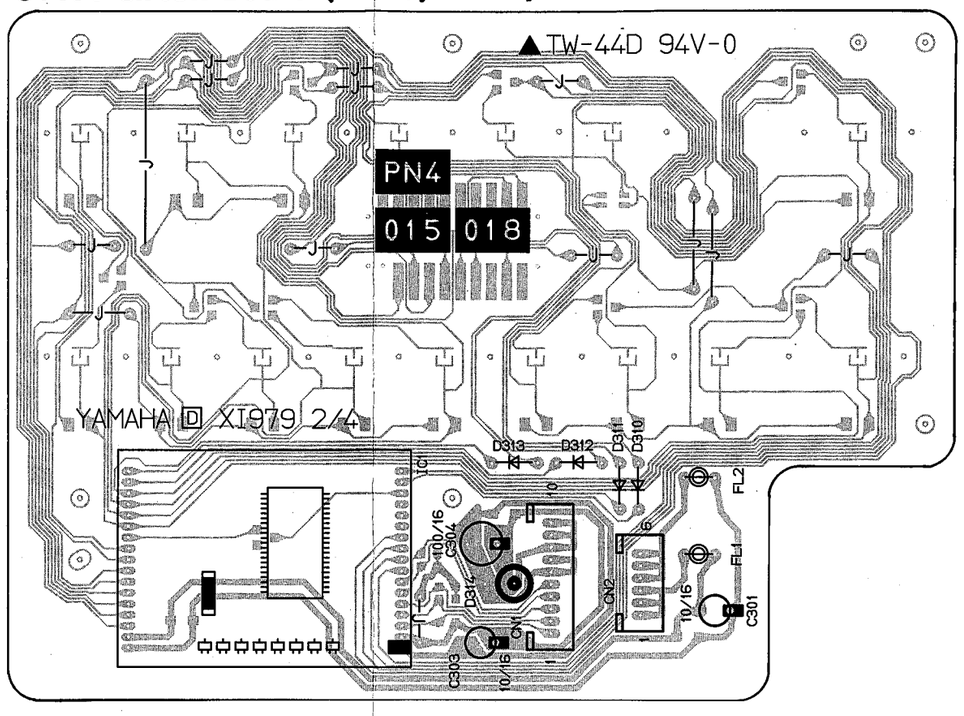

● PN3 Circuit Board (EL-90) — Components side

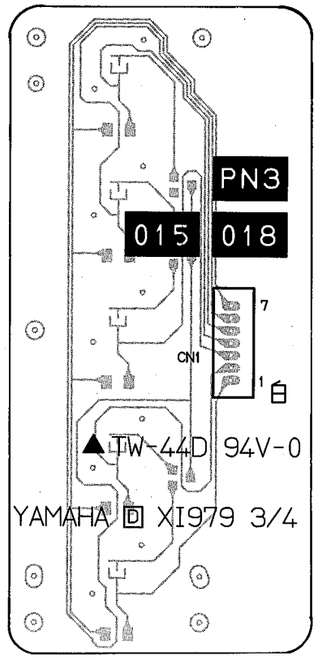

EL-90/EL-70

● PN1 Circuit Board (EL-90) —Pattern side

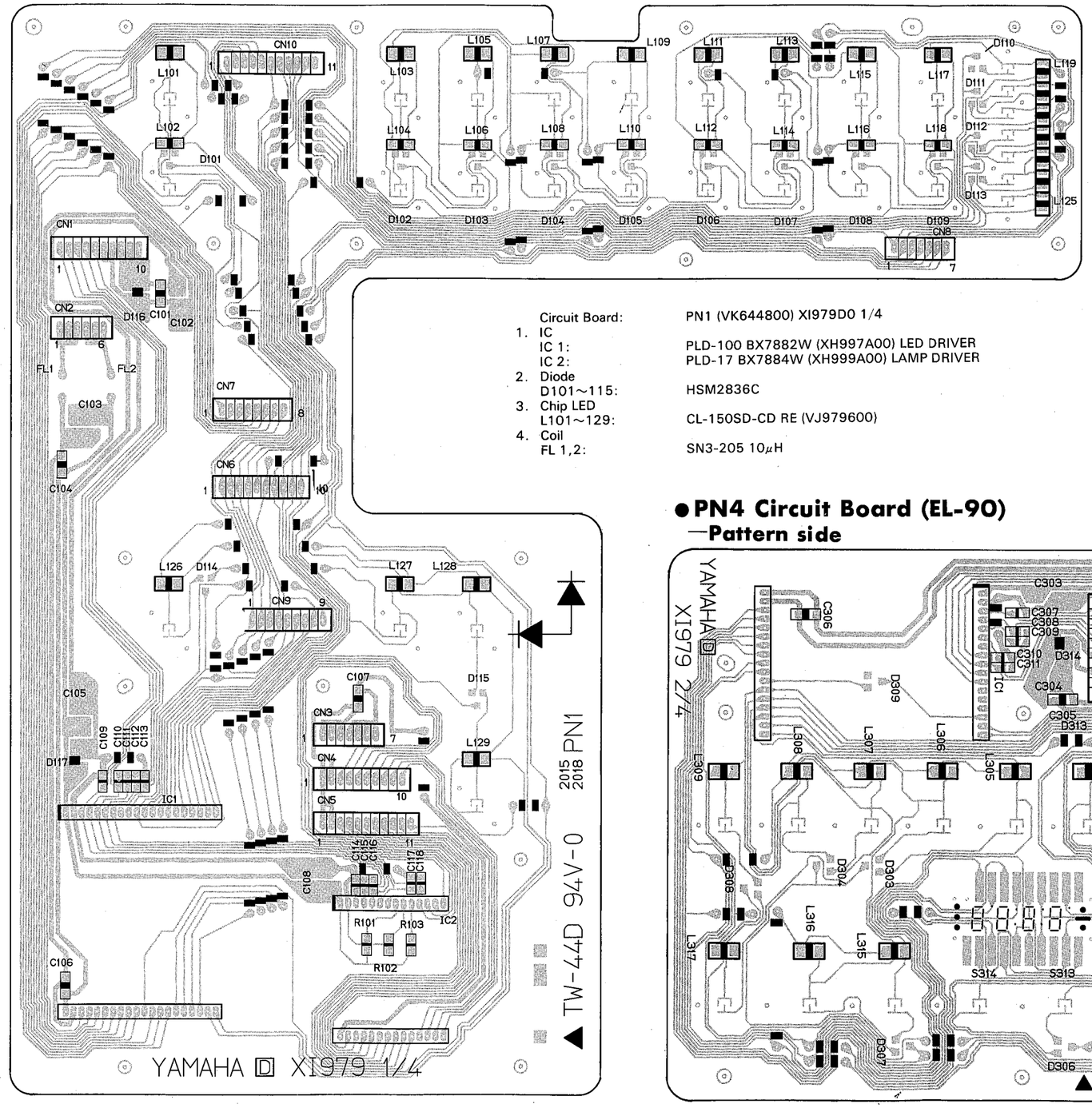

	Circuit Board:	PN1 (VK644800) XI979D0 1/4
1.	IC	
	IC 1:	PLD-100 BX7882W (XH997A00) LED DRIVER
	IC 2:	PLD-17 BX7884W (XH999A00) LAMP DRIVER
2.	Diode	
	D101~115:	HSM2836C
3.	Chip LED	
	L101~129:	CL-150SD-CD RE (VJ979600)
4.	Coil	
	FL 1,2:	SN3-205 10μH

● PN4 Circuit Board (EL-90) —Pattern side

● PN3 Circuit Board (EL-90) —Pattern side

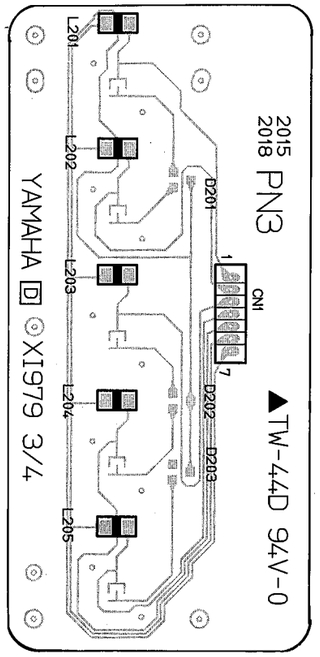

	Circuit Board:	PN3 (VK644900) XI979D0 3/4
1.	Diode	
	D201~203:	HSM2836C
2.	Chip LED	
	L201~205:	CL-150SD-CD RE (VJ979600)

	Circuit Board:	PN4 (VK645000) XI979D0 2/4
1.	IC	
	IC 1:	PLD-72 BX7883W (XH998A00) LED DRIVER
2.	Diode	
	D301~309:	HSM2836C
	D310~313:	HRP100
3.	Chip LED	
	L301~310, 313~315:	CL-150SD-CD RE (VJ979600)
	L311,312:	CL-155SD/PG-CD RE/GR
4.	Coil	
	FL 1,2:	SN3-205 10μH
5.	LED Display:	LC-204VL7 7seg. (VK000900) SONG SELECT

VK64460 ⚠2

● ANG Circuit Board (EL-90)

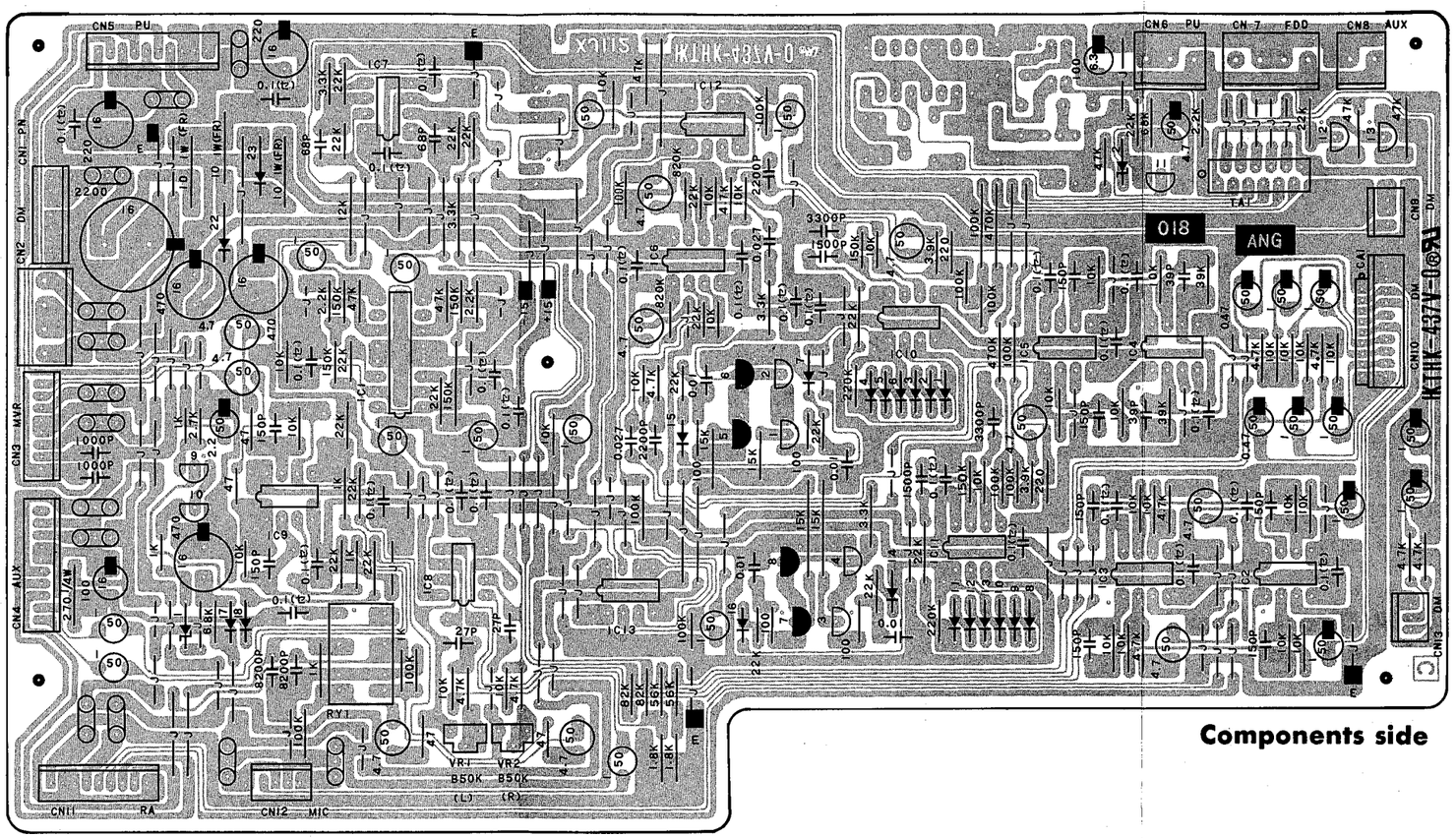

Components side

	Circuit Board:	ANG (VK748600) XJ112C0
1.	IC	
	IC 1:	M5283P (XI315A00) VCA
	IC 2~11:	RC4558DV (IG001390) OP AMP.
	IC12,13:	M5201P (XJ223A00) SW-OP AMP.
2.	Transistor	
	: 1~4,9~13	2SC1815 Y,GR (IC1815D0)
	: 5~8	2SA1015 O,Y (IA1015B0)
3.	Digital Transistor Array	
	TA 1:	DT5C143T (VK349600)
4.	Diode	
	: 1~18	1SS133 (IF003450)
	: 22,23	11ES4 (VB481900)
5.	Zener Diode	
	: 1	MTZ10B 10V (VA095900)
	: 2	MTZ3.0B 3.0V (VL119100)
6.	Fuse Resistor	
	(FR):	10Ω 1W J (VI637400)
7.	Trimmer Potentiometer	
	VR 1,2:	B50K 3P EVN (VL522200)
8.	Electrolytic Cap.	
	470/16:	470μF 16V (UJ838470)
	2200/16:	2200μF 16V (VF173700)
9.	Semiconductive Cera. Cap.	
	0.1(ヒ):	0.1μF 16V N (FZ005060)
10.	Ceramic Cap. Array	
	CA 1:	1000pF×8 50V M (VL122400)
11.	LC Filter	
		DSS306-93F223Z1 22000p (VD542700)
12.	Relay	
	RY 1:	DC G5A-237P (VB996300)

EL-90/EL-70

● PN2 Circuit Board (EL-90)

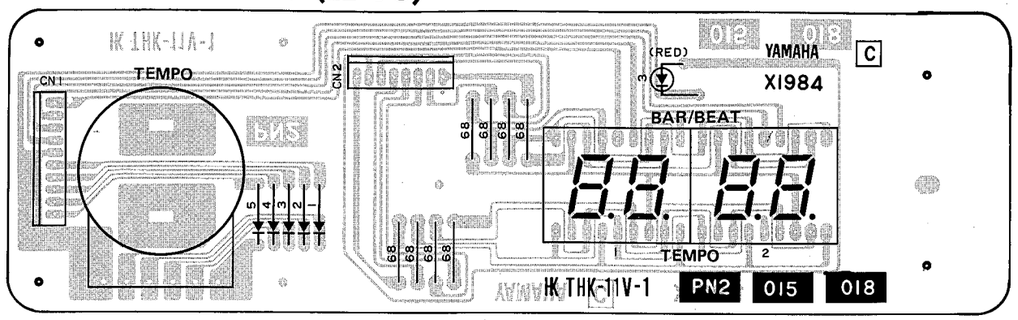

Components side

	Circuit Board:	PN2 (VK645200) XI984C0
1.	Diode	
	D 1~5:	1SS133 (IF003450)
2.	LED	
	㊀: 3	SLZ-989C-03 RE (VL387200)
3.	Rotaly Encoder:	EC24BG5D (VC844200) TEMPO
4.	LED Display:	SL-9284-22 7seg (VC999500) TEMPO, BAR
5.	Connector Assembly	
	CN 1:	DS-KR 10P L=70mm PN2(CN1)—PN1(CN6)
	CN 2:	DS-KR 8P L=150mm PN2(CN2)—PN1(CN7)

● PS1 Circuit Board (EL-90)

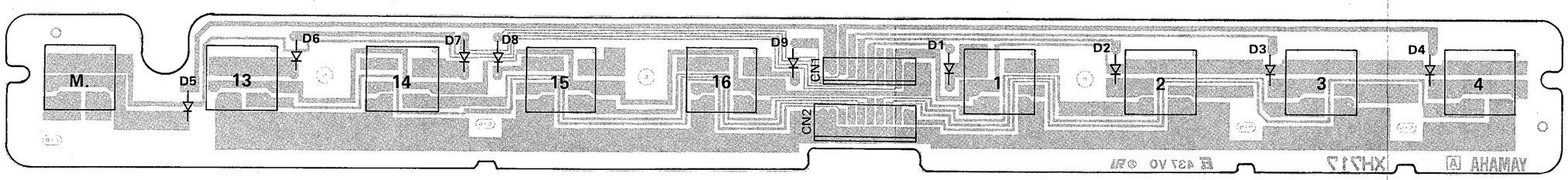

Components side

	Circuit Board:	PS1 (VJ332100) XH717A0
1.	Diode	
	D 1~9:	1SS176 (VA240700)
2.	Push Switch	
	1:	15AL (VF731200) 1
	2:	15AL (VF731300) 2
	3:	15AL (VF731400) 3
	4:	15AL (VF731500) 4
	13:	15AL (VK083900) 13
	14:	15AL (VK084100) 14
	15:	15AL (VK084200) 15
	16:	15AL (VK084400) 16
	M./TO DISK:	15AL (VL127300) M./TO DISK

● PS2 Circuit Board (EL-90)

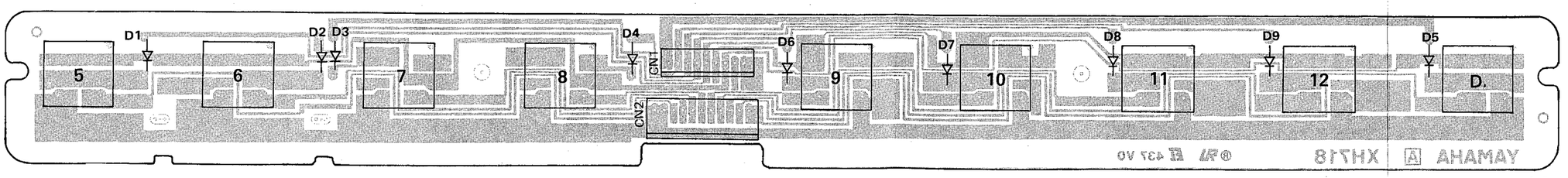

Components side

	Circuit Board:	PS2 (VJ332200) XH718A0
1.	Diode	
	D 1~9:	1SS176 (VA240700)
2.	Push Switch	
	5:	15AL (VF731600) 5
	6:	15AL (VF731700) 6
	7:	15AL (VF731800) 7
	8:	15AL (VF731900) 8
	9:	15AL (VF732000) 9
	10:	15AL (VF732100) 10
	11:	15AL (VF732200) 11
	12:	15AL (VF732300) 12
	D:	15AL (VF732900) D.

PN2: 2NA-VK74990 ⚠
PS1: 2NA-VJ33210
PS2: 2NA-VJ33220

EL-90/EL-70

● CP2 Circuit Board (EL-90) —Components side

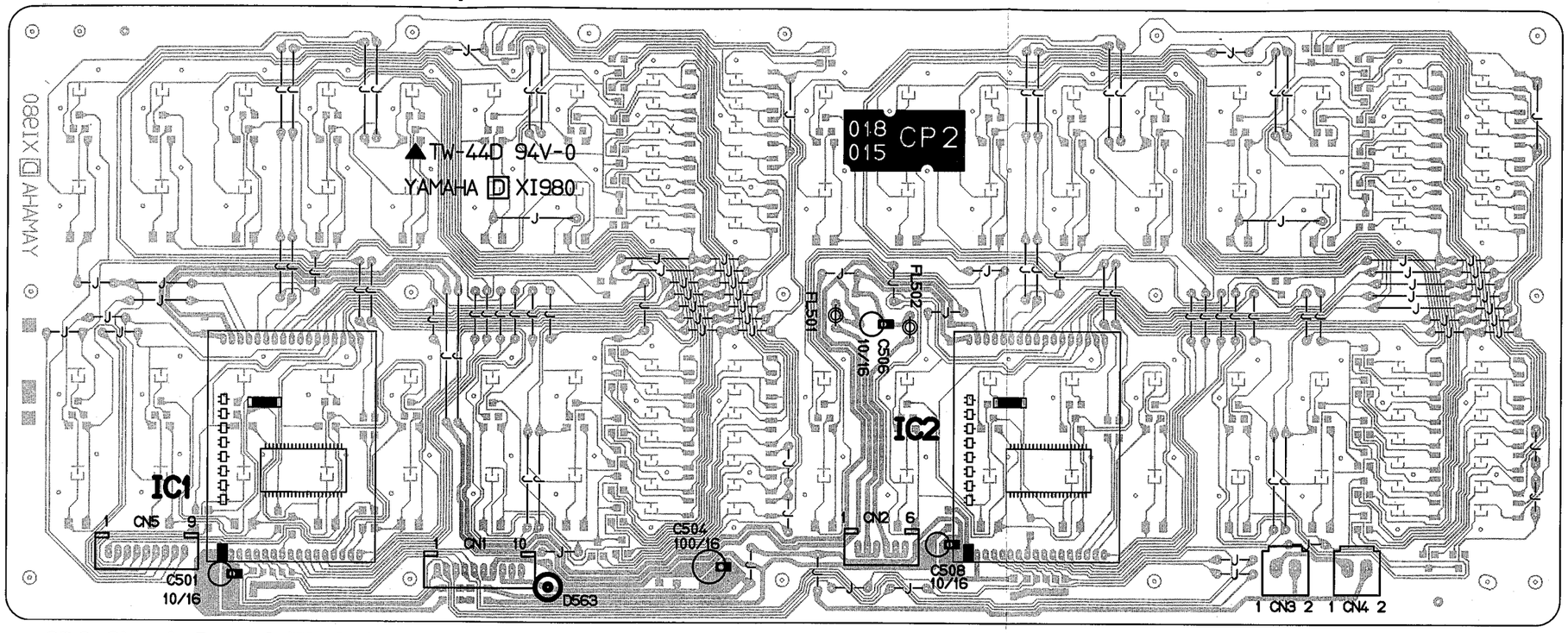

● CP2 Circuit Board (EL-90) —Pattern side

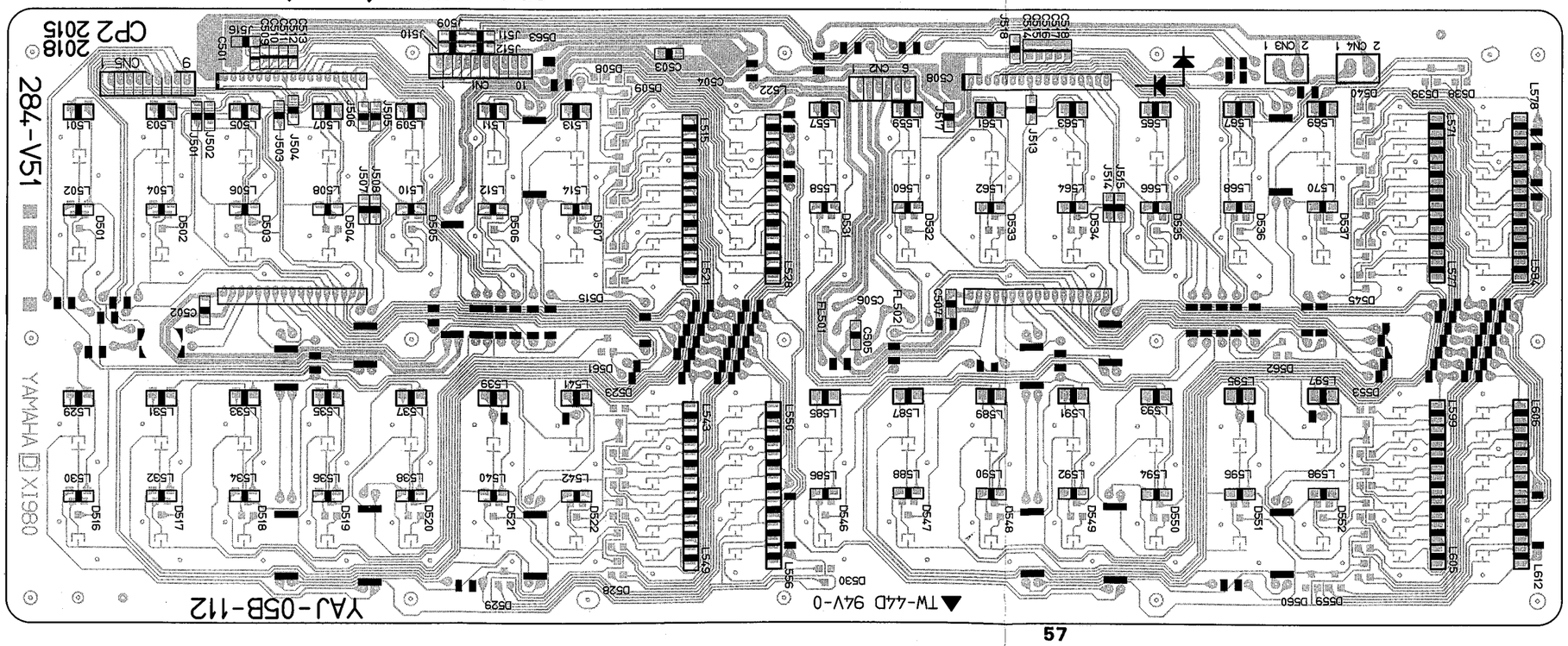

● CP1 Circuit Board (EL-90) —Components side

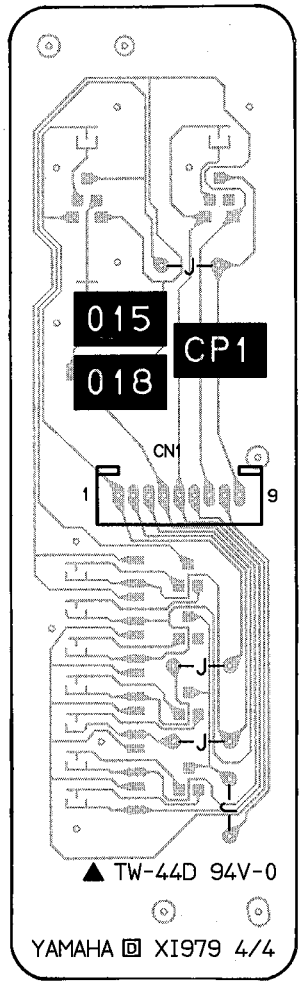

● CP1 Circuit Board (EL-90) —Pattern side

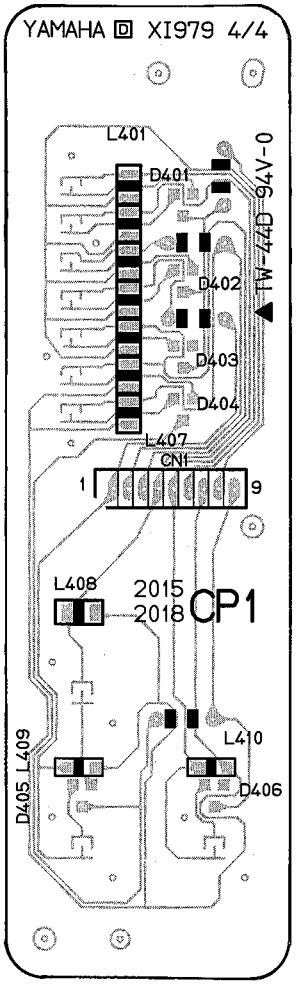

	Circuit Board:	CP1 (VK645100) XI979D0 4/4
1.	Diode, D401~406:	HSM2836C
2.	Chip LED L401~410:	CL-150SD-CD RE (VJ979600)

	Circuit Board:	CP2 (VK645400) XI980D0
1.	IC IC 1,2:	PLD-72 BX7883W (XH998A00) LED DRIVER
2.	Diode D501~562:	HSM2836C
3.	Chip LED L501~612:	CL-150SD-CD RE (VJ979600)
4.	Coil FL501,502:	SN3-205 10μH

CP1: VK64460 △2
CP2: VK64540 △2
RA: 2NA-VK74920 △1
AUX: 2NA-VK74940 △3
HP: 2NA-VJ66010 △2

● RA Circuit Board (EL-90)

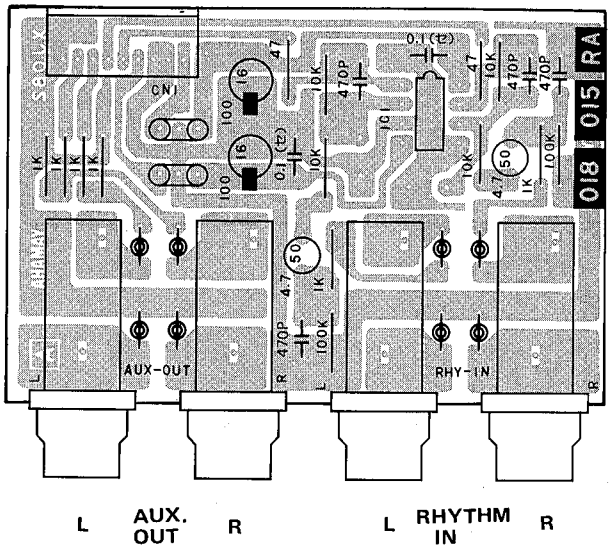

L AUX. OUT R L RHYTHM IN R

Components side

Circuit Board: RA (VK749100) XJ082A0

1. IC
   IC 1: RC4558DV (IG001390) OP AMP.
2. Semiconductive Cera. Cap.
   0.1(セ): 0.1μF 16V N (FZ005060)
3. Coil
   —◎—: SBT-0260TF 60μH (VF968800)
4. EMI Filter
   ⊂⊃: LS MT Y223NB 22000p (FZ005920)
5. Phone Jack
   AUX-OUT, RHY-IN L: YKB21-5014 BL (VC687500)
   AUX-OUT, RHY-IN R: YKB21-5154 GY (VD376100)

● AUX Circuit Board (EL-90)

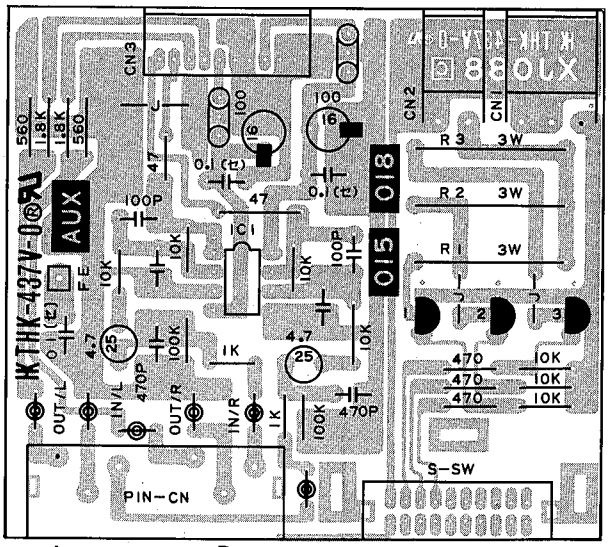

L R
AUX.OUT
AUX. IN
LCD BRIGHTNESS

Components side

Circuit Board: AUX (VK749300) XJ088C0

1. IC
   IC 1: RC4558DV (IG001390) OP AMP.
2. Transistor
   ▽: 1~3: 2SA1296 Y,GR (VK806700)
3. Metal Film Resistor
   R 1: 1.1Ω 3W J (VL060000)
   R 2: 1.8Ω 3W J (VL060100)
   R 3: 2.2Ω 3W J (VL060200)
4. Semiconductive Cera. Cap.
   0.1(セ): 0.1μF 16V N (FZ005060)
5. Coil
   —◎—: SBT-0260TF 60μH (VF968800)
6. LC Filter
   ⊂⊃: DSS306-93F223Z1 22000p (VD542700)
7. Slide Switch
   S-SW: SSSF14 (VH101900) LCD BRICHTNESS
8. Pin Jack
   PIN-CN: YKC21-0476 (VJ885400) AUX IN/OUT(L/R)

● HP Circuit Board (EL-90)

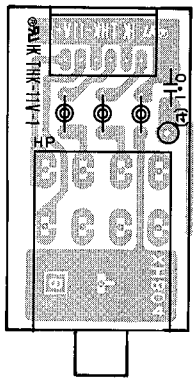

HEADPHONES

Components side

Circuit Board: HP (VJ660100) XH804B0

1. Semiconductive Cera. Cap.
   0.1(セ): 0.1μF 16V N (FZ005060)
2. Coil
   —◎—: SBT-0260TF 60μH (VF968800)
3. Phone Jack
   HP: YKB21-5008 BL (VB891100) HEADPHONES

● CP3 Circuit Board (EL-90) —Components side

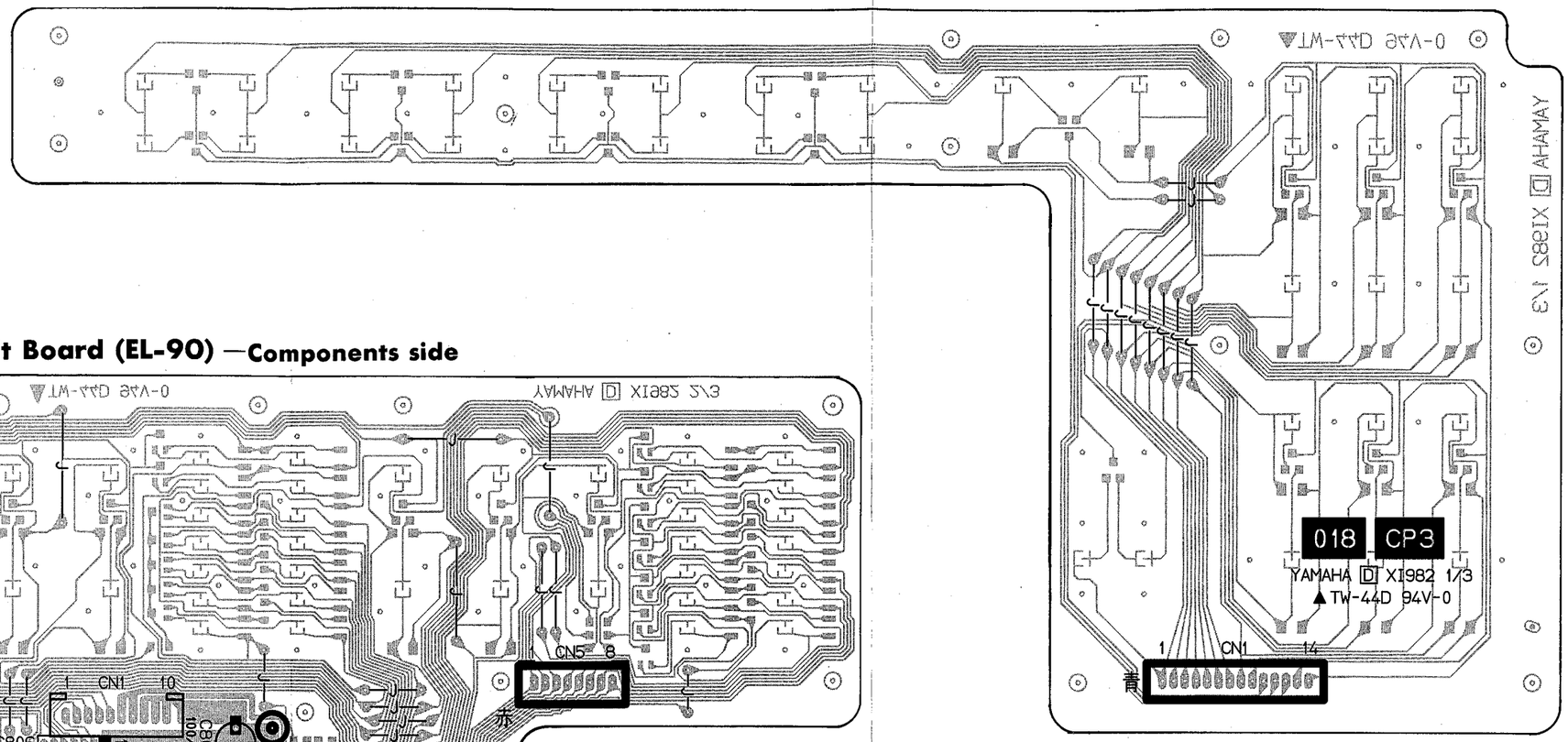

● CP4 Circuit Board (EL-90) —Components side

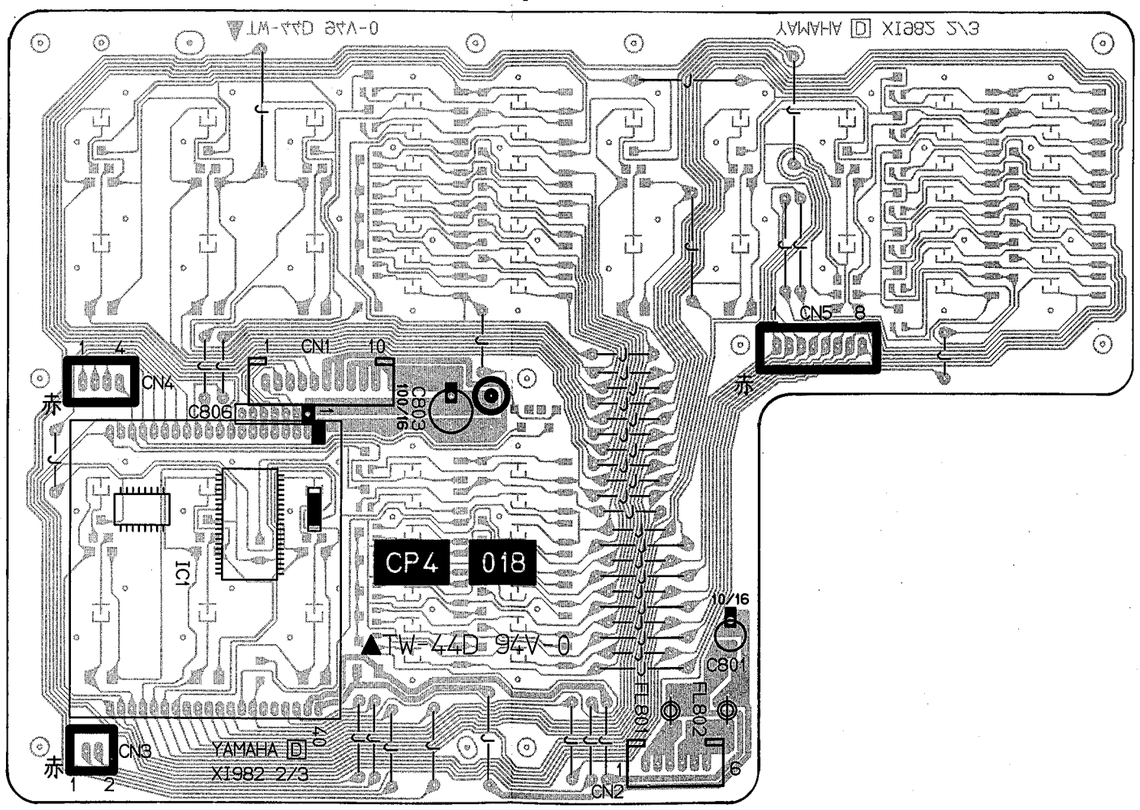

● MVR Circuit Board (EL-90) —Components side

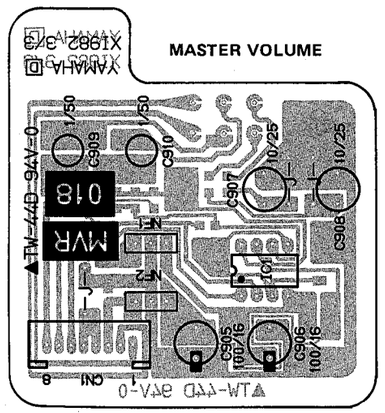

EL-90/EL-70

● CP4 Circuit Board (EL-90) —Pattern side

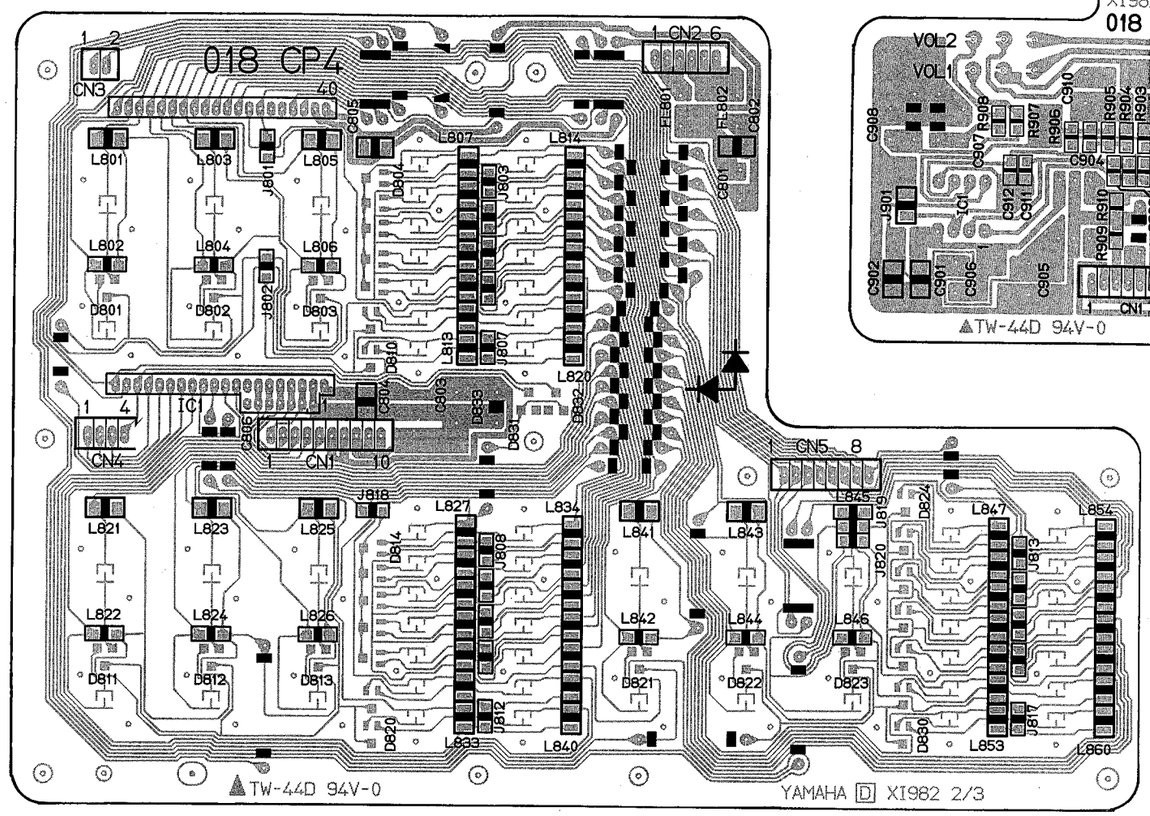

● MVR Circuit Board (EL-90) —Pattern side

● CP3 Circuit Board (EL-90) —Pattern side

VK64600 ⚠2

Circuit Board: MVR (VK645900) XI982D0 3/3
1. IC
   IC 1: RC4558DV (IG001390) OP AMP.
2. Variable Resistor
   VOL 1,2: A10K×3 MASTER VOLUME
3. EMI Filter
   NF 1,2: DSS306-93F223Z1 22000p(VD542700)

Circuit Board: CP4 (VK645800) XI982D0 2/3
1. IC
   IC 1: PLD-100 BX7882W (XH997A00) LED DRIVER
2. Diode
   D801~832: HSM2836C
3. Chip LED
   L801~860: CL-150SD-CD RE (VJ979600)
4. Ceramic Cap. Array
   C806: EXF-P6680MF (VL439600)
5. Coil
   FL801,802: SN3-205 10μH

Circuit Board: CP3 (VK645700) XI982D0 1/3
1. Diode
   D701~716: HSM2836C
2. Chip LED
   L701~712,715,716: CL-150SD-CD RE (VJ979600)

EL-90/EL-70

● EF Circuit Board (EL-90) —Components side

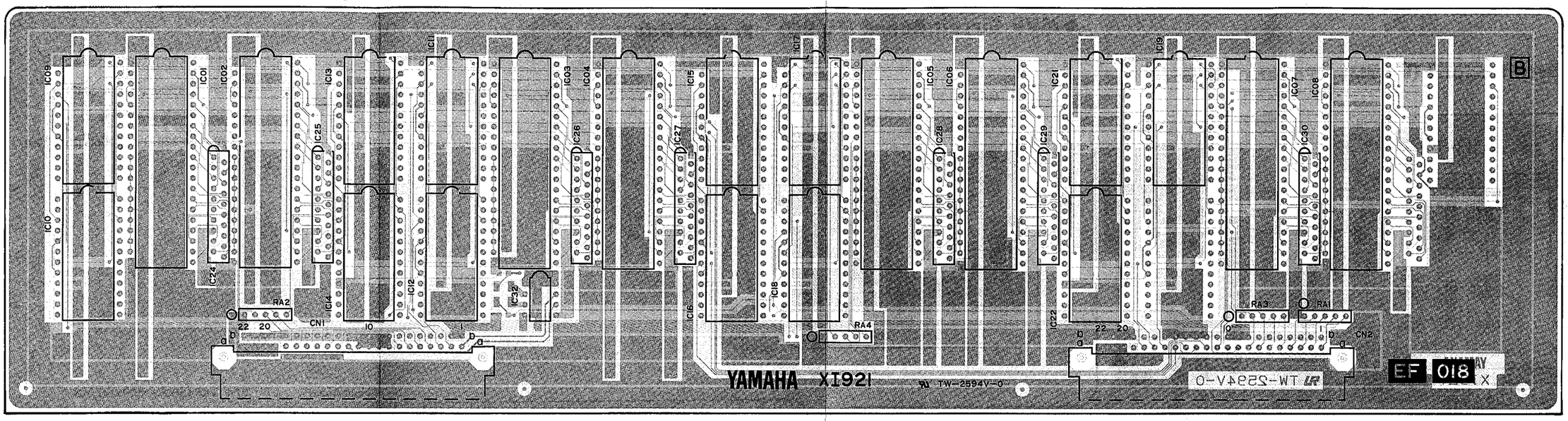

● EF Circuit Board (EL-90) —Pattern side

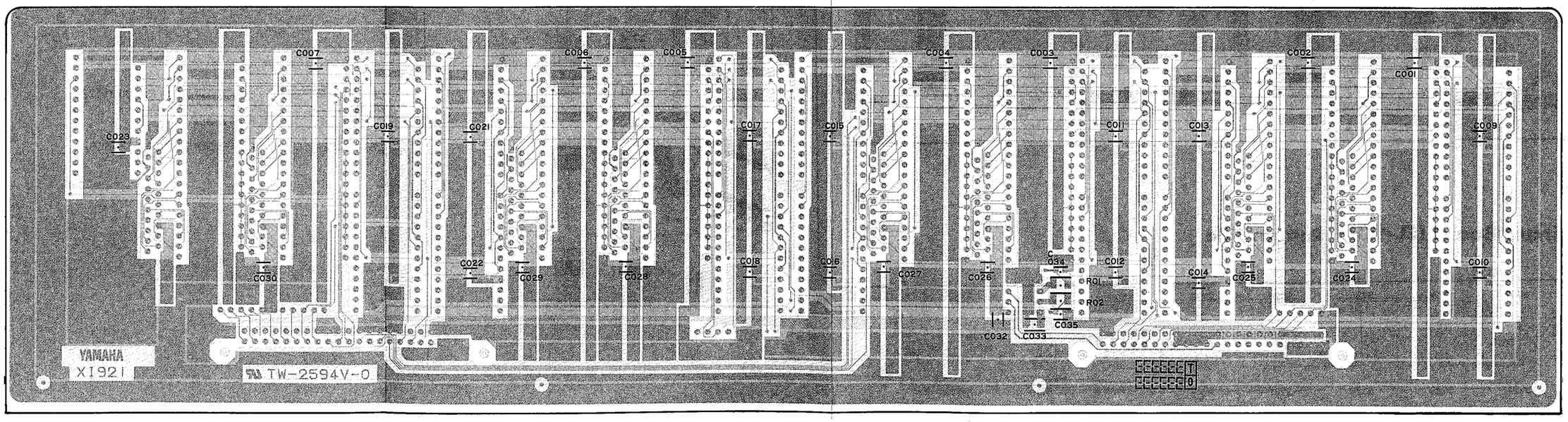

	Circuit Board:	EF (VK748300) XI921B0 Japanese model S/# 1001～
		EF (VK837400) XJ003A0 (4)
1.	IC	
	IC 1～7:	YM3415B (XE450B00) LEF
	IC 9～19,21～23:	YM2406 (XA804A00) DFL
	IC24～30:	M5M4464AL-10 (XE070A00) DRAM 256K
	IC32:	T6400(S) (IG079500) DRIVER
2.	Resistor Array	
	RA 1～4:	RMLS4 J 104 (VB933600) 100K×4

●MIC Circuit Board (EL-90)

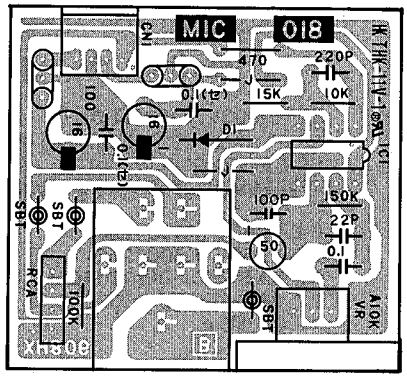

MIC. MIC. VOL.

Components side

	Circuit Board:	MIC (VJ659500) XJ806B0
1.	IC	
	IC 1:	RC4558DV (IG001390) OP AMP.
2.	Diode	
	D 1:	SC527 (VL434500)
3.	Variable Resistor	
	A10K VR:	A10K RK094111 (VL048300) MIC.VOL
4.	Semiconductive Cera. Cap.	
	0.1(ㅌ):	0.1μF 16V N (FZ005060)
5.	Coil	
	—◎— SBT:	SBT-0260TF 60μH (VF968800)
6.	LC Filter	
	○□○:	DSS306-93F223Z1 22000p (VD542700)
7.	Phone Jack:	YKB21-5006 (LB101870) MIC
8.	RC Module	
	RCA:	H8DN2448 (VL407800)

EF: 2NA-VK74830 ⚠1 ⚠1
MIC: 2NA-VJ65970 ⚠4

●MIDI Circuit Board (EL-90)

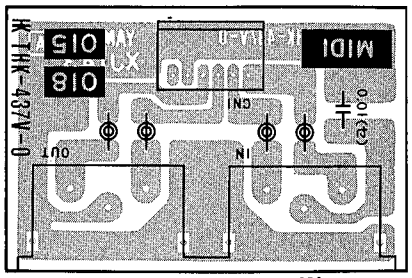

Components side

Circuit Board: MIDI (VK836400) XJ143A0

1. Coil
   ⊸◎⊸ : SBT-0260TF 60μH (VF968800) 4pcs
2. DIN Jack
   IN,OUT: 3P YKF51-5054 (VJ885500) MIDI IN/OUT

●PRM Circuit Board (EL-90)

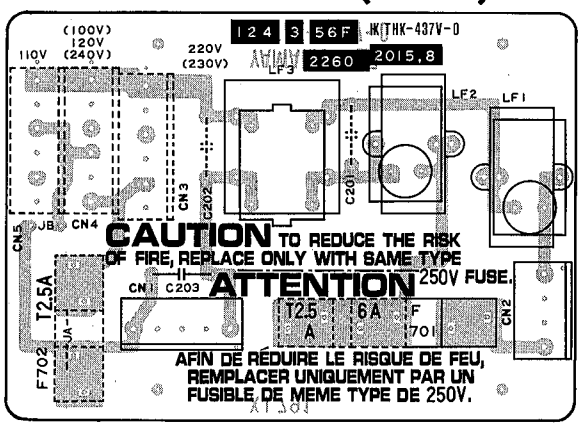

Components side

Circuit Board: PRM (VJ636200) XI791A0 (J)
PRM (VJ636300) XI791A0 (U,C)
PRM (VJ636400) XI791A0 (D,H,B,A)
PRM (VJ636500) XI791A0 (X,M)

1. Ceramic Cap.
   C203: 0.01μF 125V (VA302800)
2. Coil
   LF 1,2: SN10-500J (VJ898200) or SF1-T10-50-01 (VK900000)
   LF 3: SC-05-10J (VJ898300) or TF2528S-102Y5R0 (VK315900)
3. Fuse
   F701 (J,X,M): 6.0A 250V (KB001280)
   (U,C): 6.0A 250V (KB001250)
   (D,H,B,A): T 2.5A S 250V (KB000690)
   F702 (X,M): T 2.5A S 250V (KB000690)
   (others): Jumper Wire
4.

	JB	CN3	CN4	CN5
J.U.C	X	X	O	X
D,H,B,A	X	O	O	O
X,M	O	O	O	O

●EXP Circuit Board (EL-90)

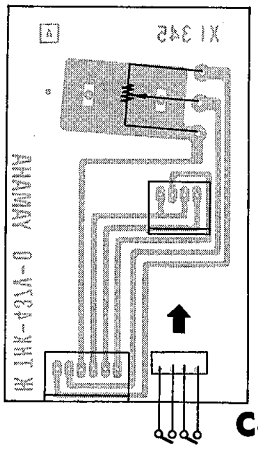

Components side

Circuit Board: EXP (VJ965100) XI345A0 (2CH)

1. Variable Resistor: B10K RK16Y11L (VA228800)

●2nd EXP Circuit Board (EL-90)

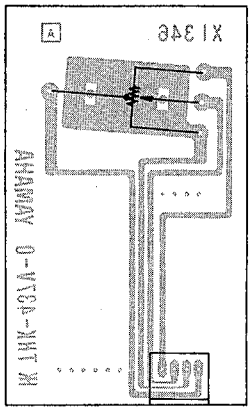

Components side

Circuit Board: EXP (VJ965300) XI346A0 (2ND EXP)

1. Variable Resistor: B10K RK16Y11L (VB437200)

●KNELEV Circuit Board (EL-90)

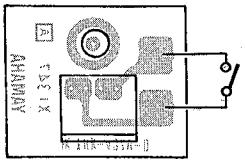

Components side

Circuit Board: KNELEV (VJ695800) XI347A0

MIDI: 2NA-VK83650
PRM: 2NA-VJ63620 ⚠2
EXP: 2NA-VL12810
2nd EXP : 2NA-VL12820
KNELEV: 2NA-VL12800

●MDR Circuit Board (EL-90)
—Components side

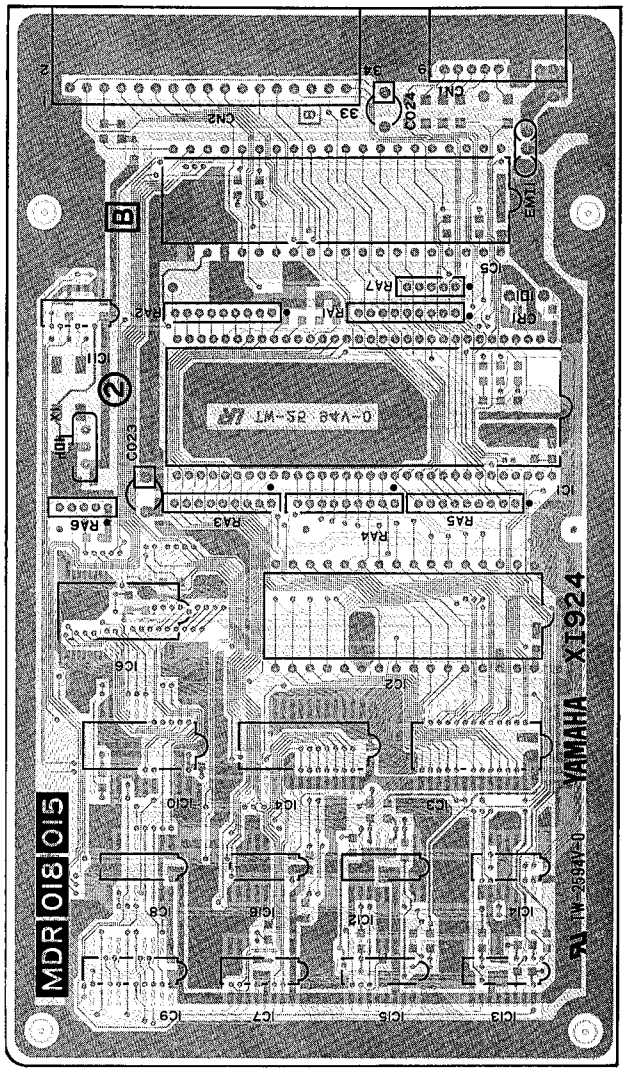

●MDR Circuit Board (EL-90)
—Pattern side

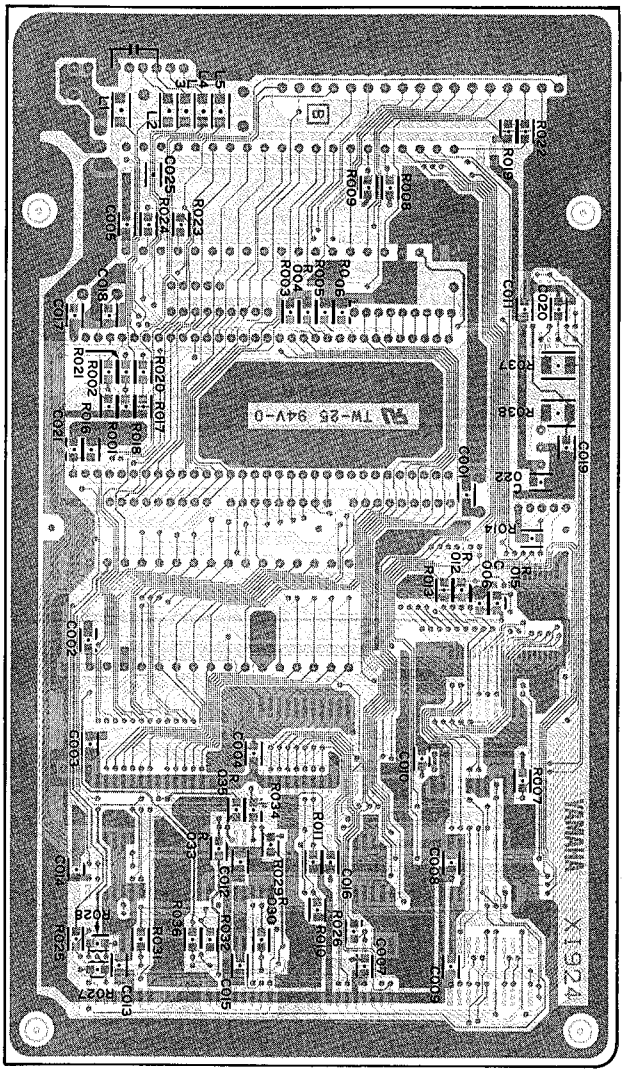

●LCD Circuit Board (EL-90)
—Components side

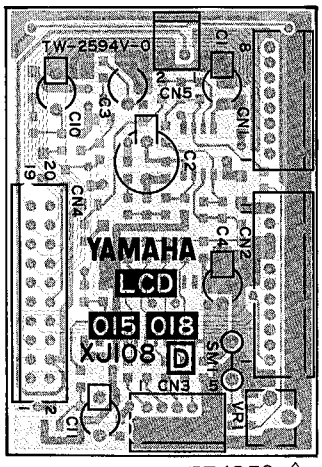

MDR: 2NA-VK74850 ⚠3
LCD: 2NA-VK74980 ⚠0

●LCD Circuit Board (EL-90)
—Pattern side

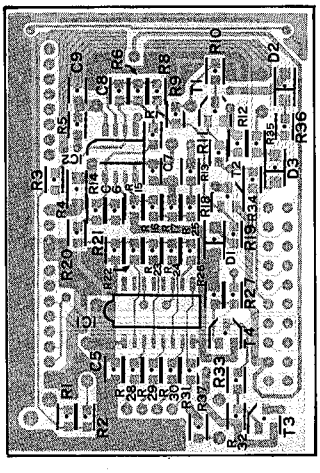

	Circuit Board:	MDR (VK748400) X1924B0 Japanese model S/# 1001~ MDR (VK837500) XJ039C0 (4)
1.	IC	
	IC 1:	HD63C03YP (XB529A00) MPU
	IC 2:	(XJ161G00) MASKROM MDR 1M
	IC 3,4:	μPD43256AGU-10 (XH688A00) SRAM 1M
	IC 5:	WD37C65C (XE909C00) FDD CONTROL
	IC 6:	TMP82C37AM-5 (XI294A00) DMA
	IC 7:	SN74AC11138NSR (XI312A00) DECODER
	IC 8:	SN74HC138NSR (XD835A00) DECODER
	IC 9:	TC74HCT373AF-T1 (XI296A00) D.LATCH
	IC10:	TMP82C54M-2 (XE451A00) TIMER/COUNTER
	IC11:	TC74HC393AF-TP1 (XE052A00) BINARY COUNTER
	IC12:	SN74AC11032NSR (XI309A00) OR
	IC13:	SN74AC11000NSR (XI308A00) NAND
	IC14:	TC74HCT04AF-T1 (XI297A00) INVERTER
	IC15:	SN74AC11008NSR (XI310A00) AND
	IC16:	SN74HC125NSR (XH218A00) BUS BUFFER
2.	Resistor Array	
	RA 1~5:	RGLE8X103J (VF771900) 10K×8
	RA 6:	RGLE4X103J (VF773500) 10K×4
	RA 7:	RGLE4X151J (VL078100) 150×4
3.	LC Filter	
	EMI 1:	DSS306-93F223Z1 22000p (VD542700)
4.	Ceramic Resonator	
	CR 1:	12.0MHz (QU007700)
5.	Quartz Crystal Unit	
	X 1:	16.0MHz DOC-492 (VI927400)
6.	Chip Inductor	
	L 1~5:	BLM32A06 (VJ928500)

	Circuit Board:	LCD (VK749700) XJ108D0
1.	IC	
	IC 1:	TC4050BF(TP1) (XJ120A00) BUFFER
	IC 2:	NJM4558MT-1 (IG103520) OP AMP.
2.	Transistor	
	T 1~3:	2SA1162 O,Y (VJ927200)
	T 4:	2SC2712 Y (VJ927100)
3.	Diode	
	D 1~3:	RLS-73 (VB797600)
4.	Positive Thermistor	
	SM 1:	PTH60T222M 2.2K (VK775000)
5.	Trimmer Potentiometer	
	VR 1:	B10K 3P EVN (VL521900)
6.	Electrolytic Cap.	
	C 2:	220μF 16V (UJ838220)

EL-90/EL-70

● MK Circuit Board (EL-90)

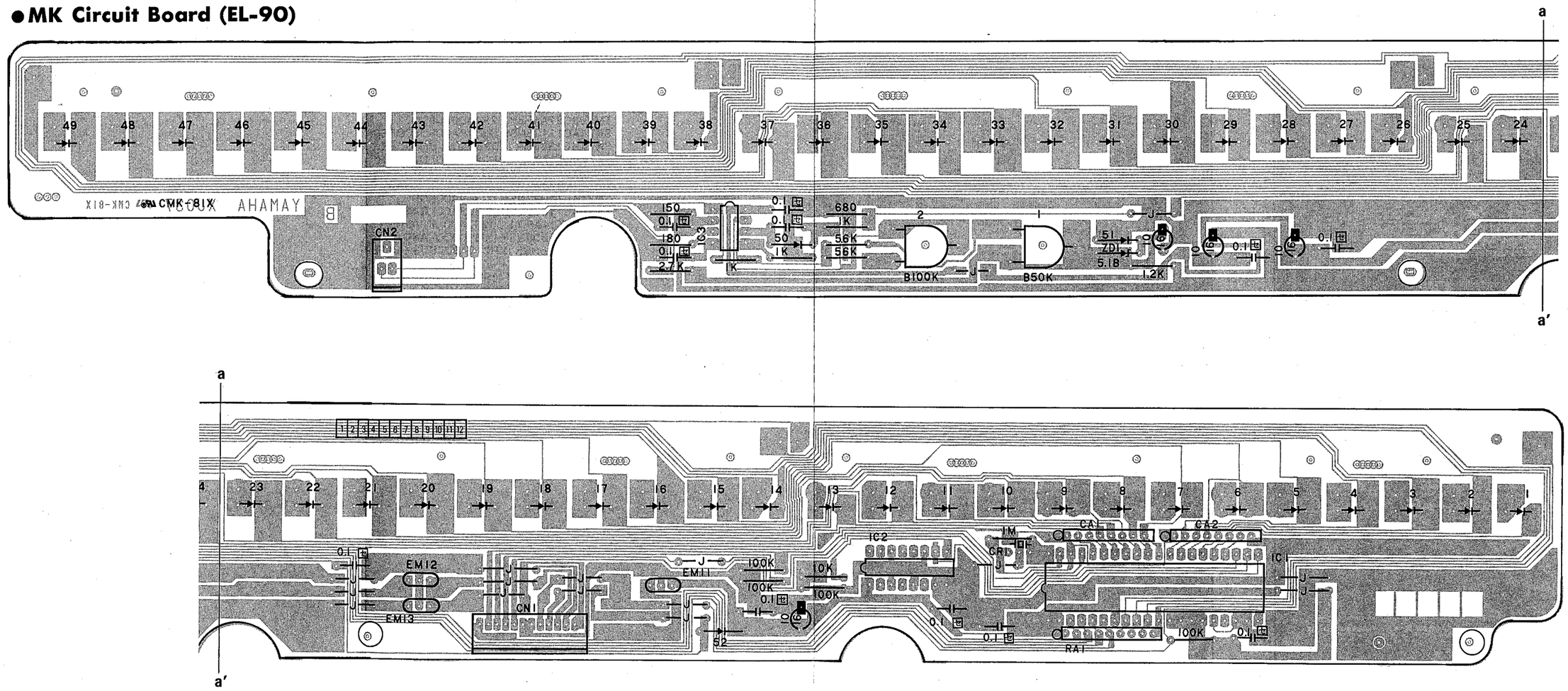

Components side

	Circuit Board:	MK (VK749000) XJ037B0
1.	IC	
	IC 1:	YM3603 (XA805001) KBS1
	IC 2:	TC4050BP (IG001740) BUFFER
	IC 3:	NJM4556 (IG042500) OP AMP.
2.	Diode	
	▶|◀ 1~52:	1SS133 (IF003450)
3.	Zener Diode	
	ZD 1:	MTZ5.1B 5.1V (VA093900)
4.	Resistor Array	
	RA 1:	RMLS8 J 333 (VB433900) 33K×8
5.	Trimmer Potentiometer	
	⊐D 1:	B50K 3P EVL (HT190070)
	⊐D 2:	B100K 3P EVL (HT190080)
6.	Monolithic Cera. Cap.	
	0.1 ⊡:	0.1μF 50V Z (VI307100) 11pcs
7.	Ceramic Cap. Array	
	CA 1,2:	1000pF×7 50V Z (VB935500)
8.	LC Filter	
	EMI 1~3:	DSS306-93F223Z1 22000p (VD542700)
9.	Ceramic Resonator	
	CR 1:	3.25MHz (VB467100)

EL-90/EL-70

● PKL Circuit Board (EL-90)

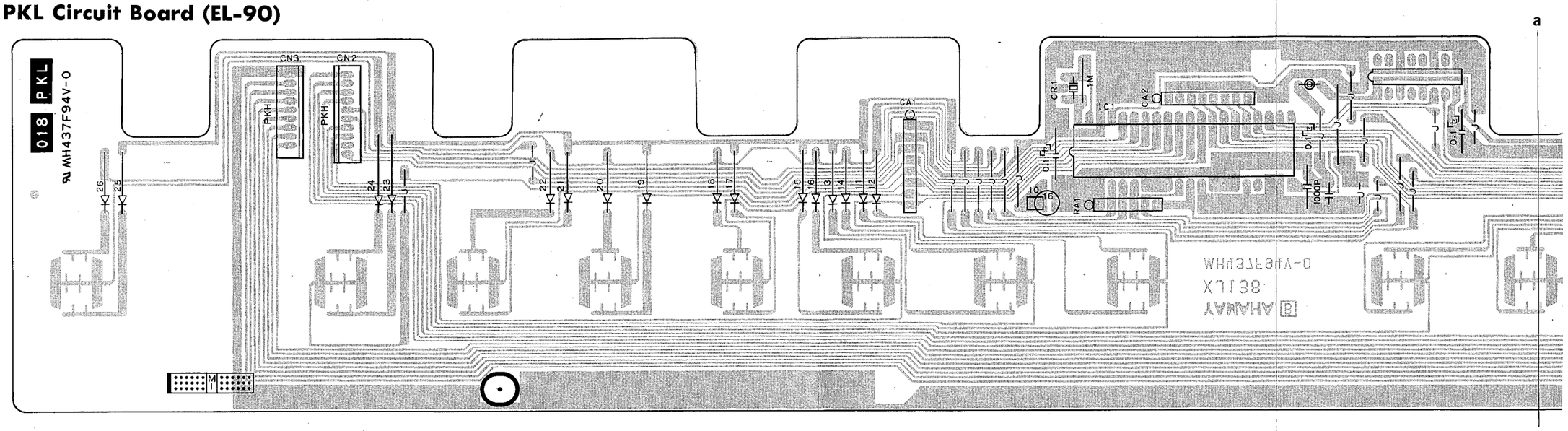

● PKH Circuit Board (EL-90)

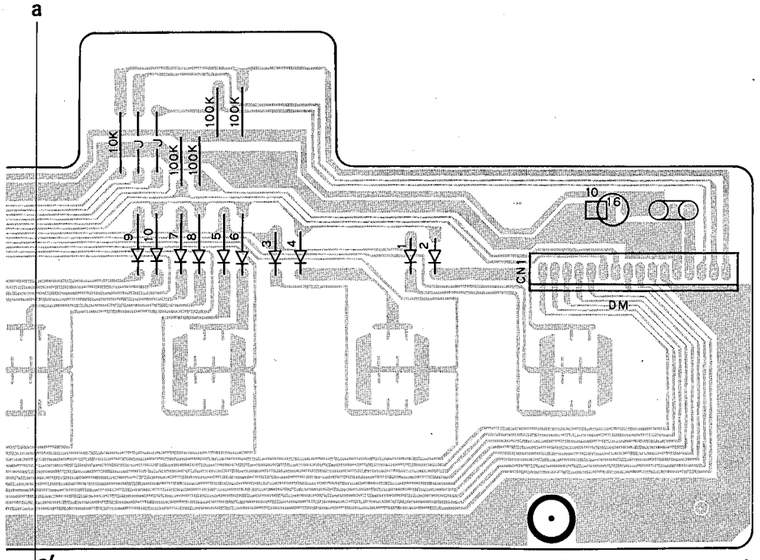

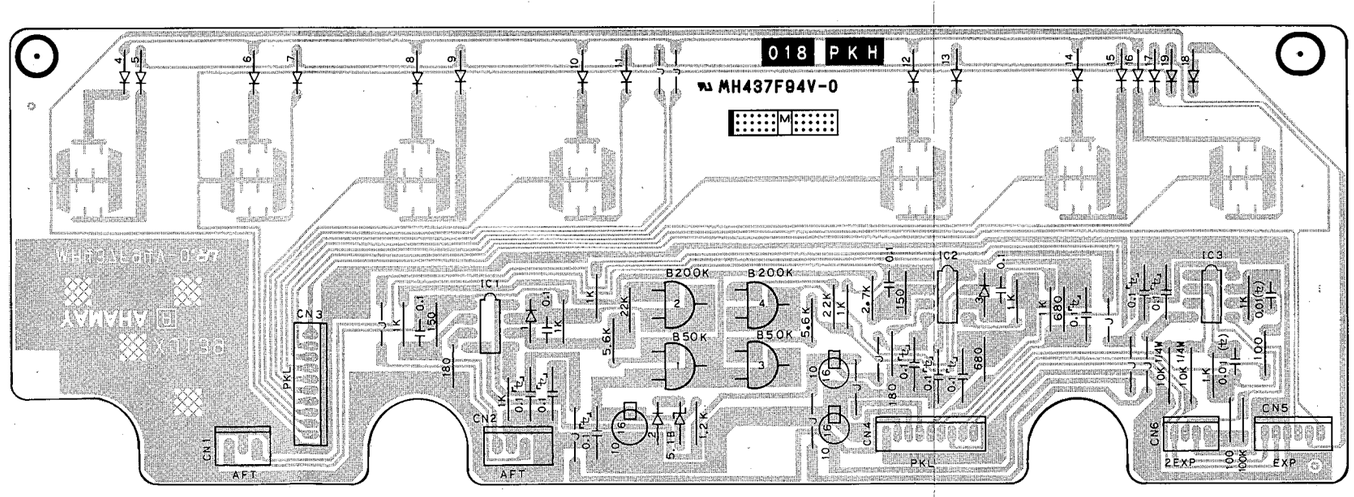

Components side

	Circuit Board:	PKL (VK806200) XJ138B0 (J)
1.	IC	
	IC 1:	YM3603 (XA805001) KBS1
	IC 2:	TC4050BP (IG001740) BUFFER
2.	Diode	
	⊣▷⊢ 1~26:	1SS133 (IF003450)
3.	Resistor Array	
	RA 1:	RGLD5X153J (VL217400) 15K×5
4.	Monolithic Cera. Cap.	
	0.1「セ」:	0.1μF 50V Z (VI307100) 3pcs
5.	Ceramic Cap. Array	
	CA 1,2:	1000pF×7 50V Z (VB935500)
6.	EMI Filter	
	⊂⊃:	
7.	Ceramic Resonator	LS MT Y223NB (FZ005920) 1pc.
	CR 1:	3.25MHz (VB467100)
8.	Coil	
	⊸◎⊸:	SBT-0260TF 60μH (VF968800) 1pc.

PKL: 2NA-VK80620 ⚠
PKH: 2NA-VK80640

Components side

	Circuit Board:	PKH (VK806400) XJ139A0 (J)
1.	IC	
	IC 1~3:	RC4558DV (IG001390) OP AMP.
2.	Diode	
	⊣▷⊢ 1~19:	1SS133 (IF003450)
3.	Zener Diode	
	⊣▷◁⊢ 5.1B:	MTZ5.1B 5.1V (VA093900) 1pc.
4.	Metal Film Resistor	
	10K:	10KΩ 1/4 B (VA293500) 2pcs
5.	Trimmer Potentiometer	
	⊣▷⊢ 1,3:	B50K 3P EVN (HT370250)
	⊣▷⊢ 2,4:	B200K 3P EVN (HT370270)
6.	Monolithic Cera. Cap.	
	0.1「セ」:	0.1μF 50V Z (VI307100) 9pcs

● PU Circuit Board (EL-90)

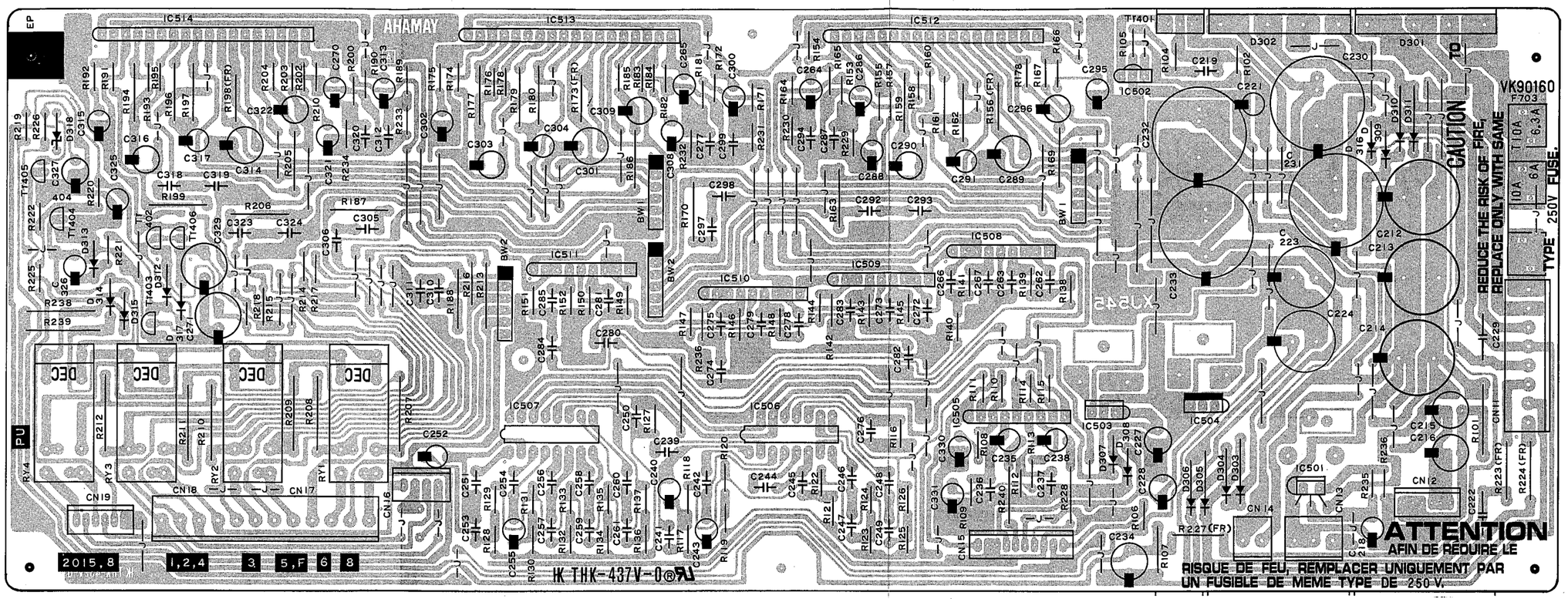

Components side

● FU Circuit Board (EL-90)

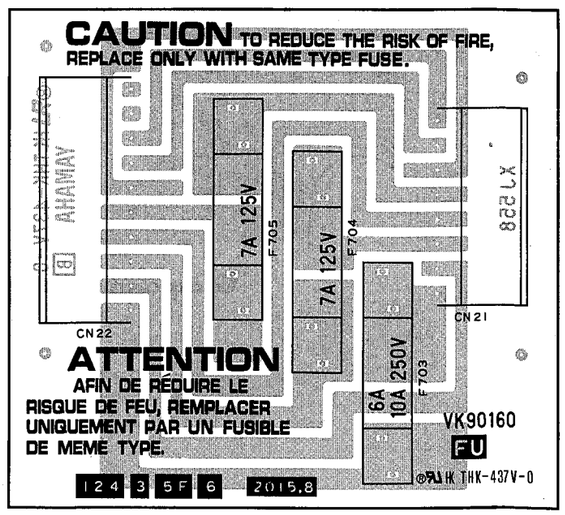

Components side

	Circuit Board:	PU XJ545A0
1.	IC	
	IC501:	SI-3050C (XI164A00) 5V REGULATOR
	IC502:	M5237L (XI165A00) REGULATOR
	IC503:	NJM7815FA (XD853A00) 15V REGULATOR
	IC504:	NJM7915FA (XD854A00) 15V REGULATOR
	IC505,508~511:	NJM4558S (IG076800) OP AMP.
	IC506,507:	M5227P (XF751A00) EQUALIZER
	IC512~514:	STK4152-2 (XI163A00) 30W P.AMP
2.	Transistor	
	Tr401:	2SA1451 O,Y (VJ828100)
	Tr402~406:	2SC1815 GR (VJ926400)
3.	Diode	
	D303~317:	11ES4 (VB481900)
4.	Diode Bridge	
	D301,302:	RBV-602 6A 200V (VL834300)
5.	Zener Diode	
	D318:	MTZ15B 15.0V (VB405800)
6.	Metal Oxide Film Resistor	
	R159,169,177, 186,194,205:	2.2KΩ 1W J (VC748400)
	R161,162,179, 180,196,197:	1.0KΩ 1W J (VC747400)
	R163,170,187, 188,199,206:	10Ω 1W J (VC742500)
	R207,208:	470Ω 2W J (VC760500)
	R209~212:	220Ω 2W J (VC759500)
7.	Fuse Resistor	
	R101:	3.3Ω 1W J (VJ828900)
	R156,173,198:	100Ω 1/4 J (HW095100)
	R223,224 (J,U,C,D,B,A,X,M):	0.47Ω 1W J (VL130300)
	(H):	Jumper Wire
	R227 (U,C):	0.47Ω 1W J (VL130300)
	(others):	Jumper Wier
8.	Electrolytic Cap.	
	C212~214:	10000μF 10V (VL276200)
	C215,216:	220μF 10V (UJ828220)
	C223,224:	2200μF 25V (VL232300)
	C230~233:	3300μF 35V (VL232400)
	C271,329:	1000μF 6.3V (UJ819100)
	C327:	220μF 25V (UJ848220)
9.	Ceramic Cap.	
	C222,229:	0.01μF 500V P (VA302600)
10.	Semiconductive Cera. Cap.	
	C292,293,297,298, 305,306,310,311, 318,319,323,324:	0.1μF 25V Z (VC694800)
11.	Relay	
	RY 1~4:	DH24D2-OT(M) 24V (KC001940)
12.	Fuse	
	F703 (H):	T 10.0A S 250V (VK901600)
	(others):	Jumper Wire
13.	Connector Assembly	
	BW1-BW1,BW2-BW2:	SCN-SCN 6p L=100mm

	Circuit Board:	FU XJ558B0 (U,C only)
1.	Fuse	
	F703:	6.0A 250V (KB001250)
	F704,705:	7.0A 125V (KB001520)

PU: 2NA-VJ63910 ⚠
FU: 2NA-VL45370

EL-90/EL-70

■CIRCUIT BOARDS

● DM Circuit Board (EL-70) —Components side

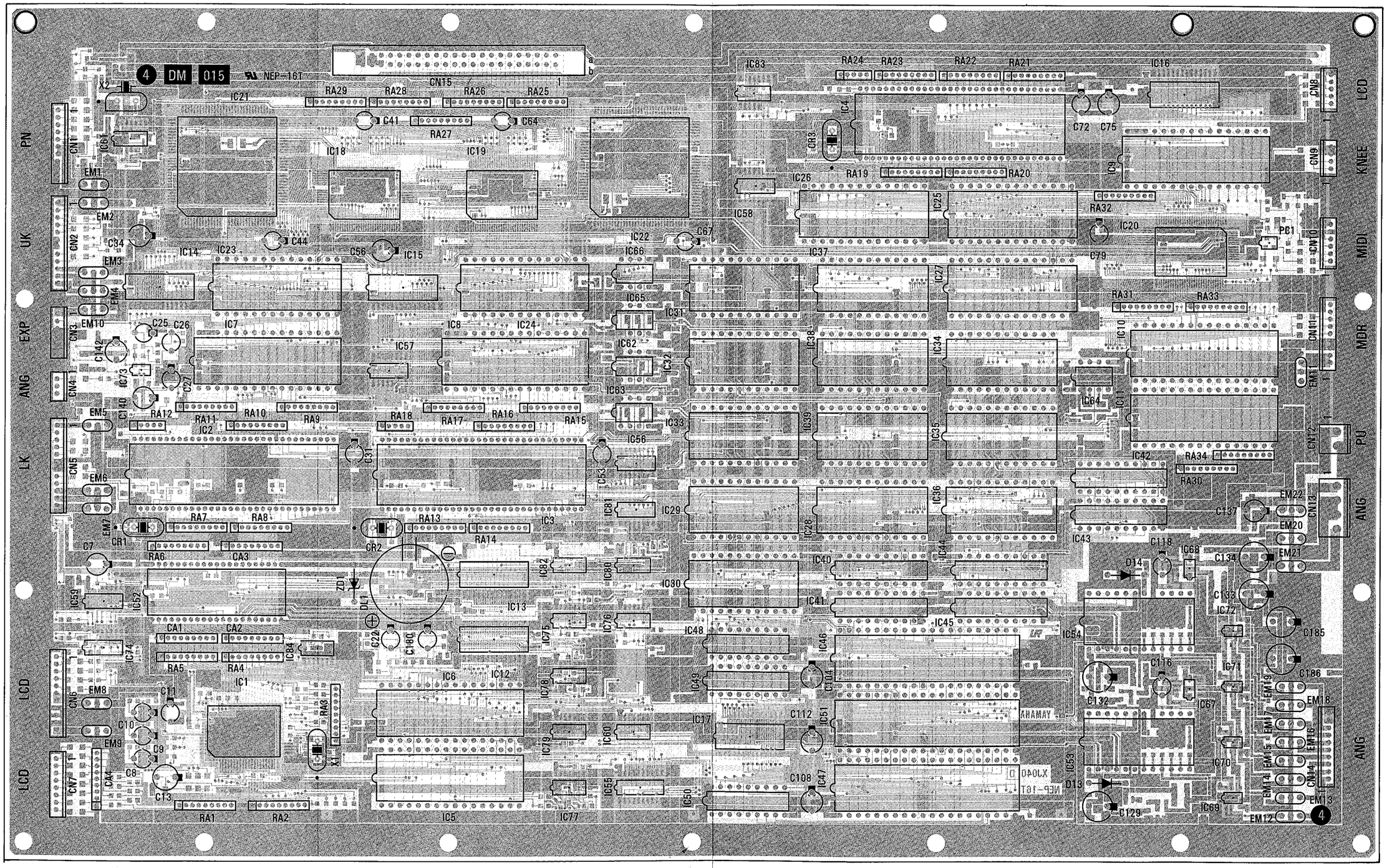

EL-90/EL-70

● DM Circuit Board (EL-70) —Pattern side

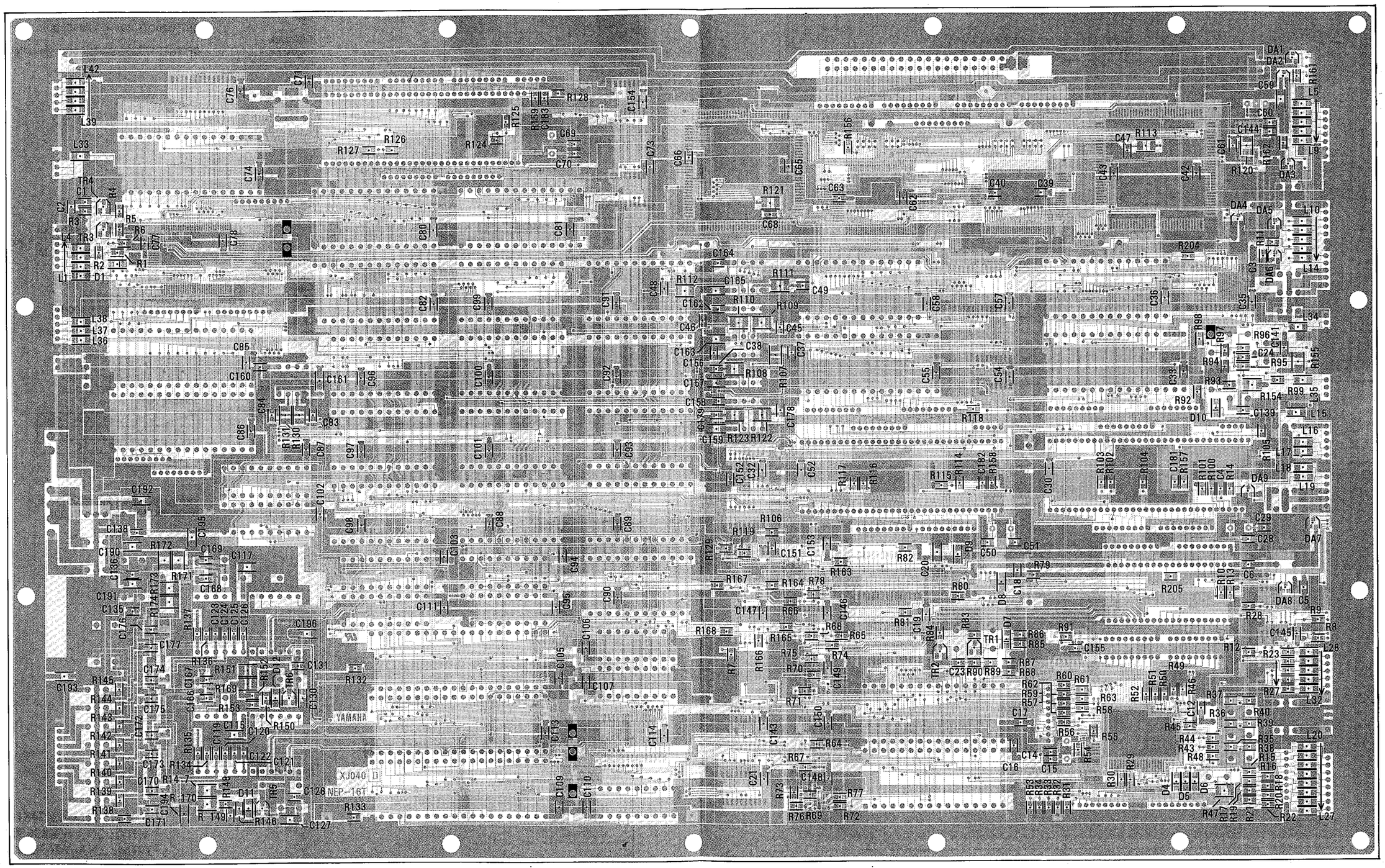
L42
L39
L33
TR4
C1
C2
R3
L4
TR3
R2
D1
L1
R5
R6
R4
R1
C76
C71
C74
C75
C78
C80
C81
R128
C154
R125
R129
C183
C69
C70
R126
R127
R124
C73
C66
C65
R156
R121
C68
C63
C62
C40
C39
C47
R113
C43
C42
C144
C61
R162
R120
C59
C60
L5
L9
DA1
DA2
R16
DA3
DA4
DA5
L10
L14
R204
C64
C34
R1
D46
C35
C36
C57
C58
C48
C49
R112
C165
R111
C164
C162
R110
R109
C46
C45
C38
C37
C163
C156
C157
C158
R108
R107
C55
C54
C33
R98
R97
R96
C141
C24
R95
R94
R93
R92
R99
R154
L35
L15
L16
L17
L18
L19
DA9
C29
C28
DA7
C6
DA8
C5
R9
R8
L28
L27
L32
L20
R22
R18
R20
R21
R47
R19
D4
D5
D6
D10
C139
R118
C159
R123
R122
C139
C178
C152
C32
C52
R117
R116
R115
R114
C182
R158
R103
R102
R104
C181
R157
R101
R100
C4
R14
R105
C30
C51
C50
D9
C153
C151
R82
C20
R79
R80
C18
R205
R110
R113
C19
D8
D7
R81
R83
R84
C147
R66
C146
R68
R65
R168
R165
R75
R74
R70
C149
R167
R164
R78
R163
R166
R7
C106
C105
C107
C131
R132
C130
R6
R151
R169
R153
C175
C172
C119
C115
C120
R150
C122
C121
R135
C173
R134
R14-7
C170
R148
D11
R5
C128
R133
C127
R146
R149
R170
C171
C194
R138
R139
R140
R141
R142
R143
R144
R145
C193
C174
C167
C166
C176
C177
C196
R136
C131
C138
C135
C136
C190
C191
C192
C169
C117
R171
R172
R173
R174
C168
C123
C124
C125
C126
R147
C135
C76
C95
C102
C98
C88
C89
C103
C94
C96
C111
C90
C91
C82
C99
C100
C92
C101
C93
C97
C87
R131
R130
C83
C84
C86
C85
C160
C161
C96
C100
C92
C101
C93
C97
C87

	Circuit Board:	DM (VK836800) XJ040D0 (4)
1.	IC	
	IC 1:	M37700SAFP (XI286A00) CPU
	IC 2~4:	HD63C03YP (XB529A00) MPU
	IC 5:	(XJ811B00) MASKROM MAIN
	IC 6:	(XJ127C00) MASKROM BANK
	IC 7,8:	HN62331PC17 (XJ129F00) MASKROM SLAVE1,2
	IC 9:	(XJ130D00) MASKROM SLAVE 3
	IC10:	HN62314BPE33 (XJ162C00) MASKROM RHY-L
	IC11:	HN62314BPE34 (XJ163C00) MASKROM RHY-H
	IC12~15:	μPD43256AGU-10 (XH688A00) SRAM 1M
	IC16:	TC5565AFL-10 (XJ122A00) SRAM 64K
	IC17:	TC51832FL-10 (XI021A00) PSRAM 256K
	IC18~20:	YM7132 (XH235B00) OPWZ
	IC21,22:	YSF207 (XI976A00) DCF1
	IC23~27:	YM7131 (XH236A00) OPLZ
	IC28~39:	YM2406 (XA804A00) DFL
	IC40~45:	TMC57800N (XG662A00) MIX5
	IC46,47:	YM3440 (XH238A00) LEF2
	IC48~50:	M5M4464AP-10 (XF981A00) DRAM 256K
	IC51:	YM3413 (XE449A00) LDSP
	IC52:	TC17G005AN-0023 (XB809A00) MI-1
	IC53,54:	YM3028 (XE789A00) DAL2
	IC55:	SN74HC373NSR (XG387A00) D.LATCH
	IC56~58:	SN74HC138NSR (XD835A00) DECODER
	IC59:	SN74HC174NSR (XD836A00) D.FF
	IC60:	SN74HC74NSR (XC726A00) D.FF
	IC61:	74AC11074NS-R (XI974A00) D.FF
	IC62~66:	T6400(S) (IG079500) DRIVER
	IC67,68:	NJM4560M(T1) (XA862B00) OP AMP.
	IC69~73:	NJM4558MT-1 (IG103520) OP AMP.
	IC74:	TC74HC4050AF-T1 (XI299A00) BUFFER
	IC75:	SN74AS04NSR (XI313A00) INVERTER
	IC76:	SN74HC04NSR (XD830A00) INVERTER
	IC77~79:	SN74AS32NSR (XI314A00) OR
	IC80:	SN74HC32NSR (XD833A00) OR
	IC81:	SN74AC11011NSR (XI307A00) AND
	IC82:	SN74LS03NSR (XI316A00) NAND
	IC83:	SN74HC08NSR (XD831A00) AND
	IC84:	SN74HC14NSR (XC725A00) INVERTER
2.	Photo Coupler	
	PC 1:	PC-400Z (VJ927500)
3.	Transistor	
	TR 1:	2SA1162 O,Y (VJ927200)
	TR 2~6:	2SC2712 Y (VJ927100)
4.	Diode	
	D 1,4~12:	RLS-73 (VB797600)
	D 13,14:	11ES4 (VB481900)
5.	Diode Array	
	DA 1~9:	DA204U 2.0A×2 (VL076300)
6.	Zener Diode	
	ZD 1:	MTZ5.6B 5.6V (VI993500)
7.	Resistor Array	
	RA 1~11,13~17, 19~23,25~34:	RGLE8X103J (VF771900) 10K×8
	RA12,18,24:	RGLE4X103J (VF773500) 10K×4
8.	Electrolytic Cap.	
	C 7,34,56,75, 104,108,112,137:	220μF 6.3V (UJ818220)
	C13:	470μF 6.3V (UJ818470)
	C129,132~134, 185,186:	220μF 16V (UJ838220)
9.	Gold Cap.	
	DL 1:	1.0F 5.5V (VH604600)
10.	Ceramic Cap. Array	
	CA 1~3:	100pF×8 50V M (VH484100)
	CA 4:	220pF×8 50V M (VJ944300)
11.	Chip Inductor	
	L 1~42:	BLM32A06 (VJ928500)
12.	LC Filter	
	EM 1~22:	DSS306-93F223Z1 22000p (VD542700)
13.	Ceramic Resonator	
	CR 1~3:	12.0MHz (VL097700)
14.	Quartz Crystal Unit	
	X 1:	AT-49/12.0MHz (VE463500)
	X 2:	25.6MHz DOC-492 (VK634300)

● ROM1 Circuit Board (EL-70) —Components side

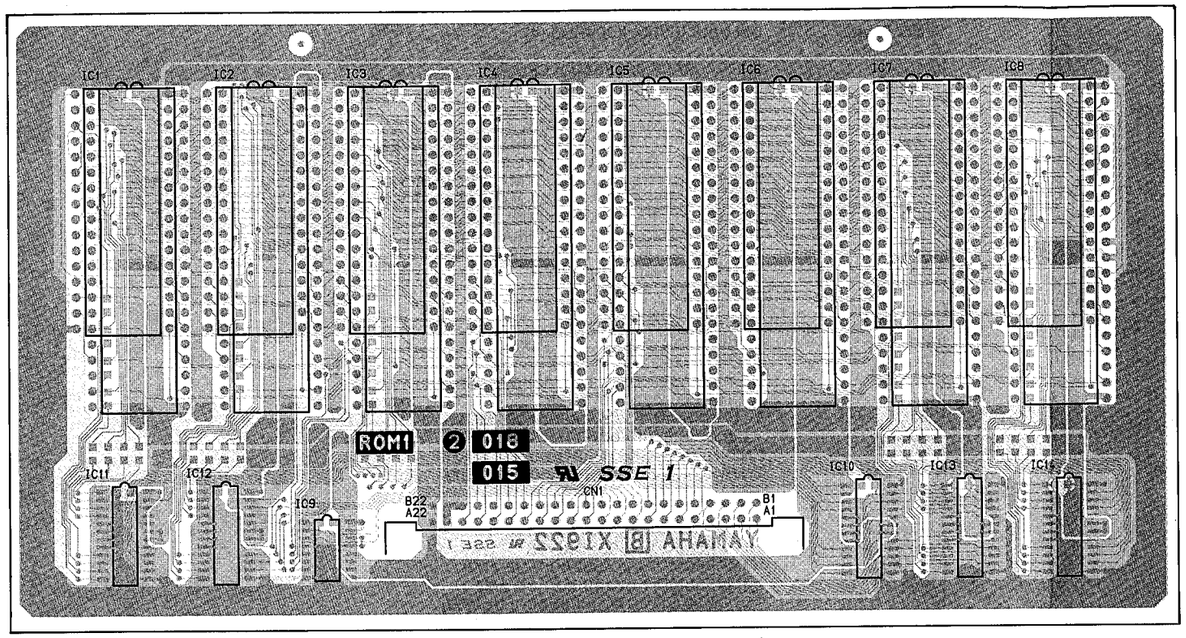

● ROM1 Circuit Board (EL-70) —Pattern side

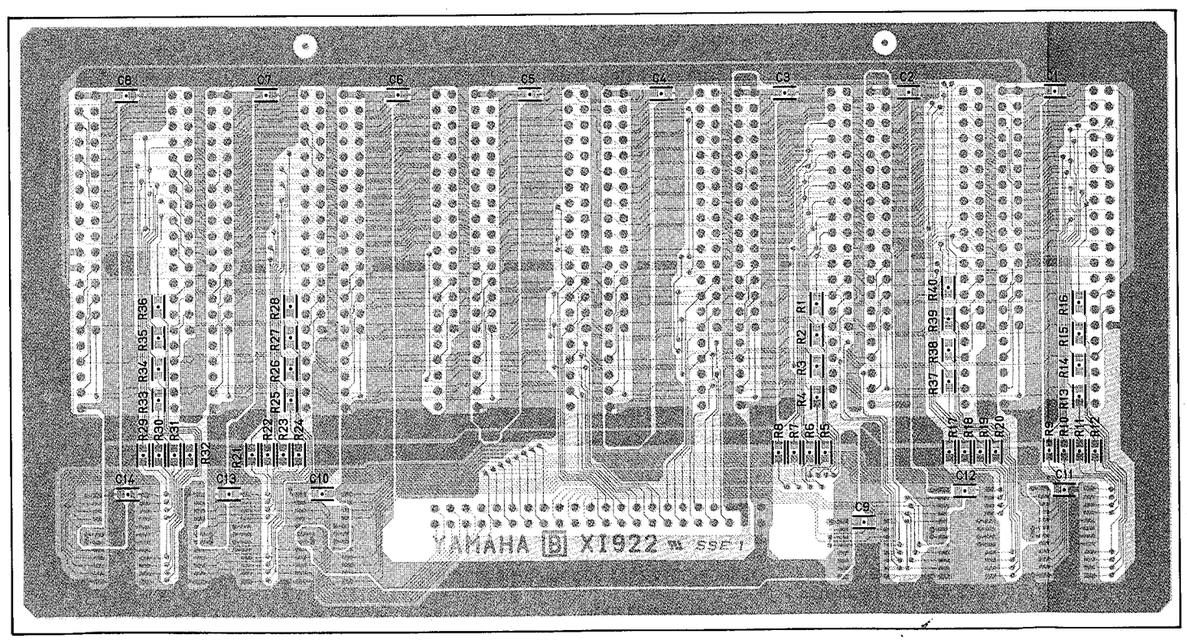

Circuit Board: ROM1 (VK803700) XI922B0 Japanese model S/# 1001~
ROM1 (VK837100) XJ004C0 (4)

1. IC

IC 1:	HN62408PD61 (XJ164C00) MASKROM AWM1 8M
IC 2:	HN62408PD62 (XJ165C00) MASKROM AWM2 8M
IC 3:	HN62408PD63 (XJ166C00) MASKROM AWM3 8M
IC 4:	LH53802L (XJ167C00) MASKROM AWM4 8M
IC 5:	LH53802S (XJ168C00) MASKROM AWM5 8M
IC 6:	LH53802Y (XJ169C00) MASKROM AWM6 8M
IC 7:	UPD23C8000CZ068 (XJ170C00) MASKROM AWM7 8M
IC 8:	UPD23C8000CZ069 (XJ171C00) MASKROM AWM8 8M
IC 9:	SN74HC139NSR (XC727A00) DECODER
IC10~14:	SN74AC11244NSE (XI311A00) BUS BUFFER

●MIDI Circuit Board (EL-70)

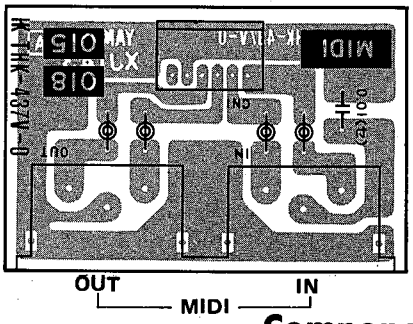

Components side

Circuit Board: MIDI (VK836400) XJ143A0

1. Coil
   : SBT-0260TF 60μH (VF968800)
2. DIN Jack
   IN,OUT: 3P YKF51-5054 (VJ885500) MIDI IN/OUT

●PRM Circuit Board (EL-70)

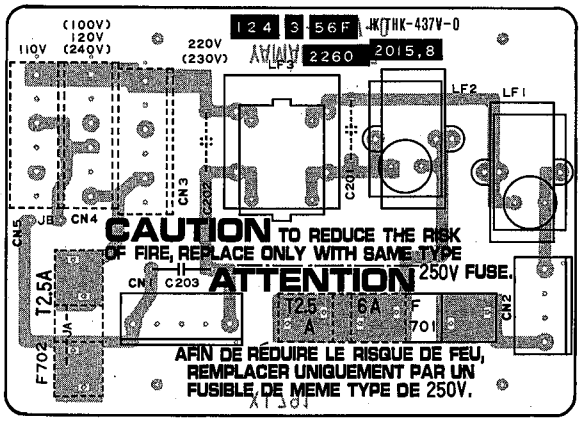

Components side

Circuit Board: PRM (VJ636200) XI791A0 (J)
PRM (VJ636300) XI791A0 (U,C)
PRM (VJ636400) XI791A0 (D,H,B,A)
PRM (VJ636500) XI791A0 (X,M)

1. Ceramic Cap.
   C203: 0.01μF 125V (VA302800)
2. Coil
   LF 1,2: SN10-500J (VJ898200)
   or SF1-T10-50-01 (VK900000)
   LF 3: SC-05-10J (VJ898300)
   or TF2528S-102Y5R0 (VK315900)
3. Fuse
   F701 (J,X,M): 6.0A 250V (KB001280)
   (U,C): 6.0A 250V (KB001250)
   (D,H,B,A): T 2.5A S 250V (KB000690)
   F702 (X,M): T 2.5A S 250V (KB000690)
   (others): Jumper Wire
4.

	JB	CN3	CN4	CN5
J.U.C	X	X	O	X
D,H,B,A	X	O	O	O
X,M	O	O	O	O

●EXP Circuit Board (EL-70)

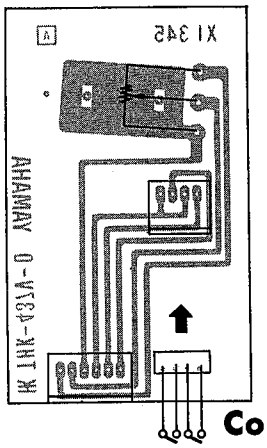

Components side

Circuit Board: EXP (VJ965100) XI345A0 (2CH)
1. Variable Resistor: B10K RK16Y11L (VA228800)

●KNELEV Circuit Board (EL-70)

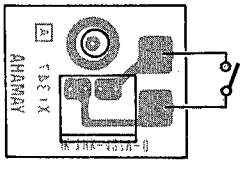

Components side

Circuit Board: KNELEV (VJ695800) XI347A0

ROM1: 2NA-VK74810 ⚠1 ⚠1
MIDI: 2NA-VK83650
PRM: 2NA-VJ63620 ⚠2
EXP: 2NA-VL12810
KNELEV: 2NA-VL12800

● ANG Circuit Board (EL-70)

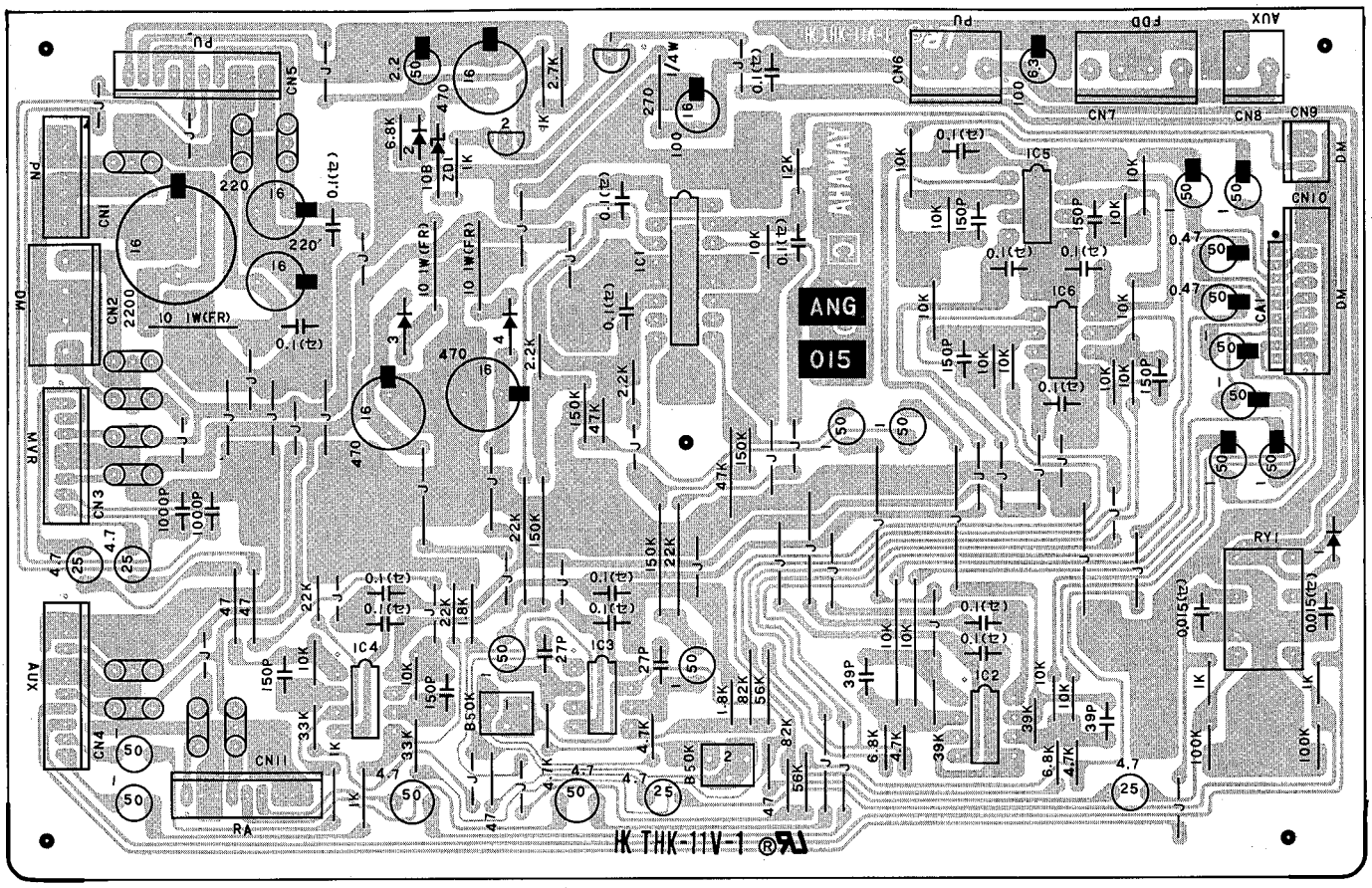

Components side

	Circuit Board:	ANG (VK748800) XJ041C0
1.	IC	
	IC 1:	M5283P (XI315A00) VCA
	IC 2~6:	RC4558DV (IG001390) OP AMP.
2.	Transistor	
	TR 1,2:	2SC1815 Y,GR (IC1815M0)
3.	Diode	
	D 1,2:	1SS133 (IF003450)
	D 3,4:	11ES4 (VB481900)
4.	Zener Diode	
	ZD 1:	MTZ10B 10V (VA095900)
5.	Fuse Resistor	
	(FR):	10Ω 1W J (VI637400) 3pcs
6.	Trimmer Potentiometer	
	VR 1,2:	B50K 3P EVN (VL522200)
7.	Electrolytic Cap.	
	220/16:	220μF 16V (UJ838220) 2pcs
	470/16:	470μF 16V (UJ838470) 3pcs
	2200/16:	2200μF 16V (VF173700) 1pc.
8.	Semiconductive Cera. Cap.	
	0.1(セ):	0.1μF 16V N (FZ005060) 16pcs
9.	Ceramic Cap. Array	
	CA 1:	1000pF×8 50V M (VL122400)
10.	LC Filter	
	⊂⊃:	DSS306-93F223Z1 22000p (VD542700) 11pcs
11.	Relay	
	RY 1:	DC G5A-237P (VB996300)

● PN1 Circuit Board (EL-70) —Components side

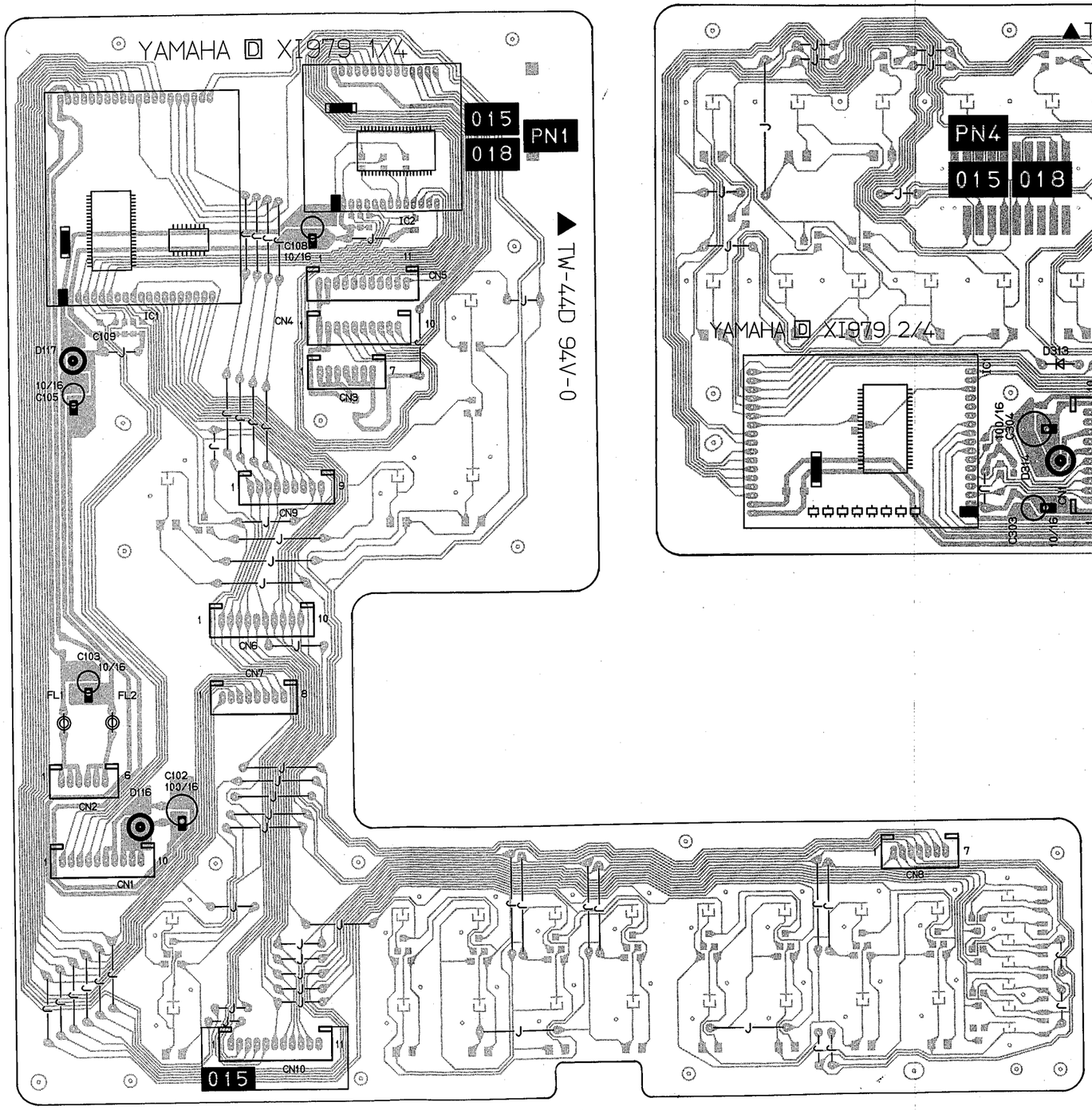

● PN4 Circuit Board (EL-70) —Components side

● PN3 Circuit Board (EL-70) —Components side

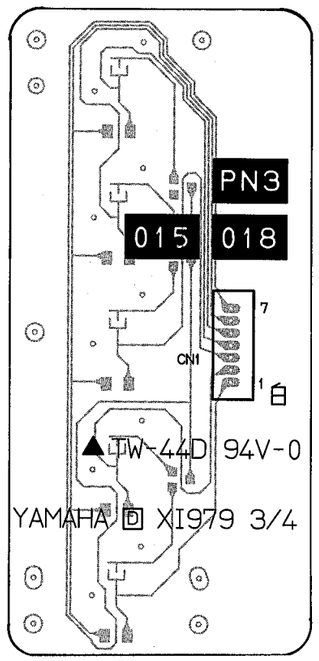

EL-90/EL-70

● PN1 Circuit Board (EL-70) —Pattern side

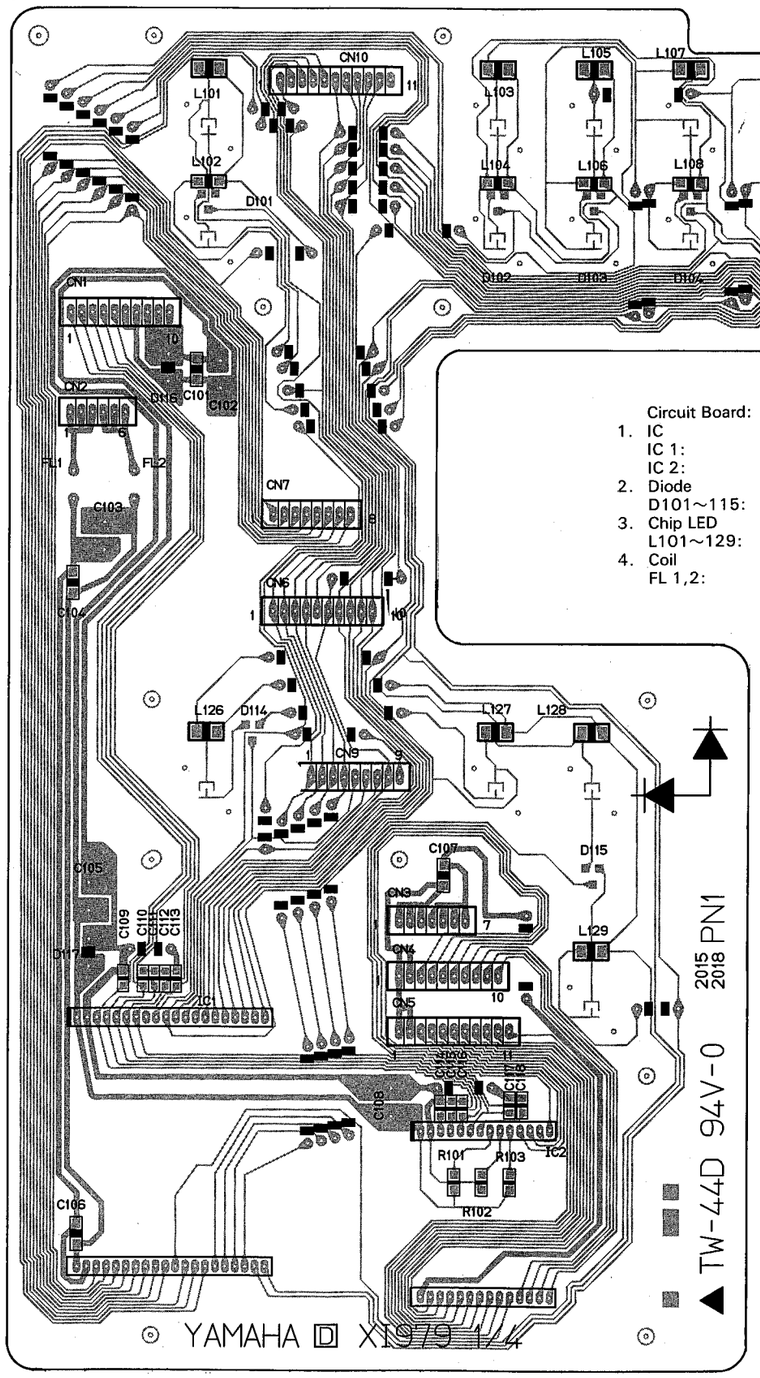

	Circuit Board:	PN1 (VK644800) XI979D0 1/4
1.	IC	
	IC 1:	PLD-100 BX7882W (XH997A00) LED DRIVER
	IC 2:	PLD-17 BX7884W (XH999A00) LAMP DRIVER
2.	Diode	
	D101~115:	HSM2836C
3.	Chip LED	
	L101~129:	CL-150SD-CD RE (VJ979600)
4.	Coil	
	FL 1,2:	SN3-205 10μH

● PN3 Circuit Board (EL-70) —Pattern side

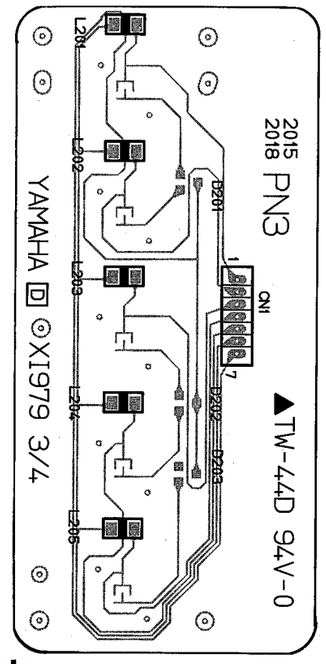

	Circuit Board:	PN3 (VK644900) XI979D0 3/4
1.	Diode	
	D201~203:	HSM2836C
2.	Chip LED	
	L201~205:	CL-150SD-CD RE (VJ979600)

● PN4 Circuit Board (EL-70) —Pattern side

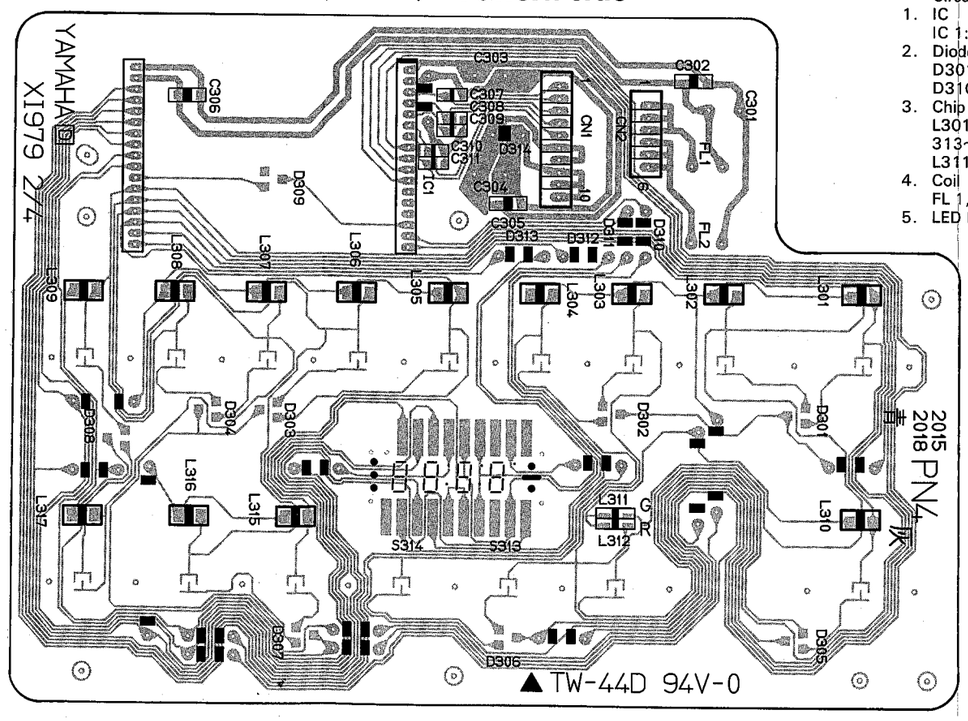

	Circuit Board:	PN4 (VK645000) XI979D0 2/4
1.	IC	
	IC 1:	PLD-72 BX7883W (XH998A00) LED DRIVER
2.	Diode	
	D301~309:	HSM2836C
	D310~313:	HRP100
3.	Chip LED	
	L301~310, 313~315:	CL-150SD-CD RE (VJ979600)
	L311,312:	CL-155SD/PG-CD RE/GR
4.	Coil	
	FL 1,2:	SN3-205 10μH
5.	LED Display:	LC-204VL7 7seg. (VK000900) SONG SELECT

EL-90/EL-70

● CP2 Circuit Board (EL-70) —Components side

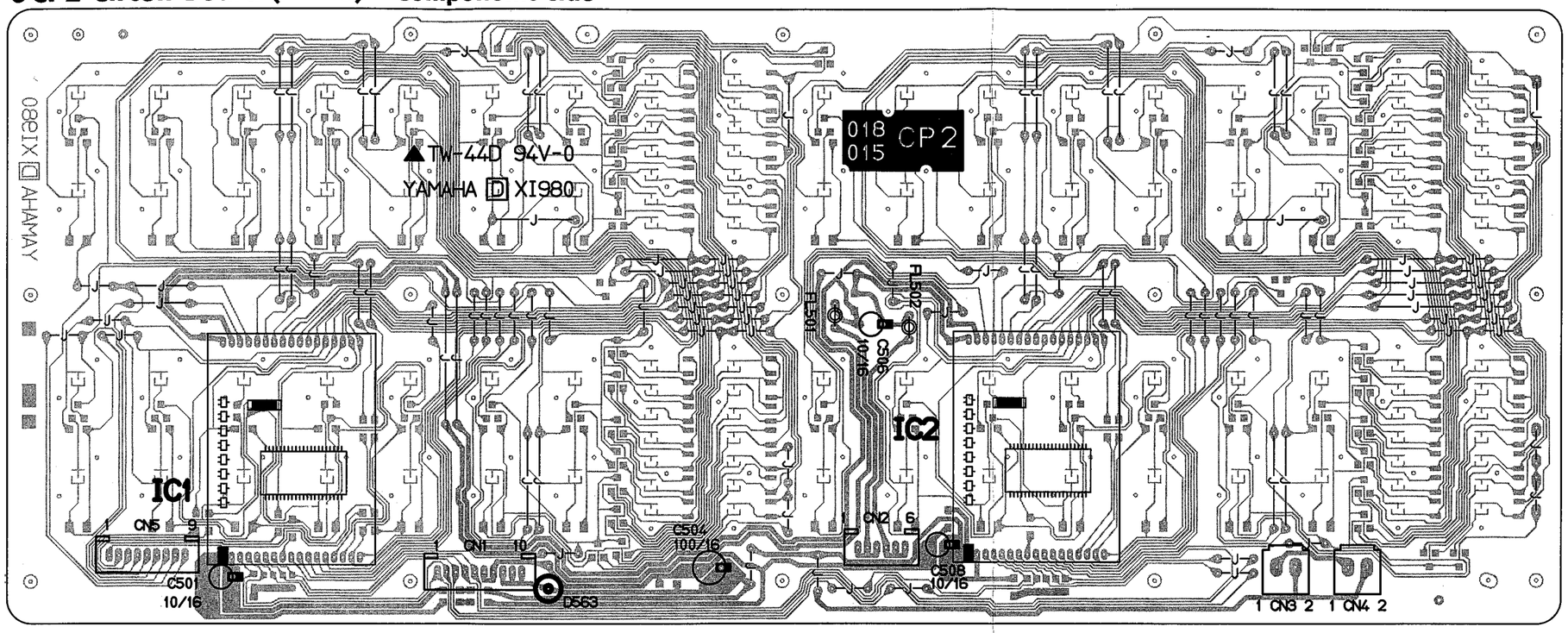

Circuit Board: CP2 (VK645400) XI980D0

1. IC
   IC 1,2: PLD-72 BX7883W (XH998A00) LED DRIVER
2. Diode
   D501~562: HSM2836C
3. Chip LED
   L501~612: CL-150SD-CD RE (VJ979600)
4. Coil
   FL501,502: SN3-205 10μH

● CP2 Circuit Board (EL-70) —Pattern side

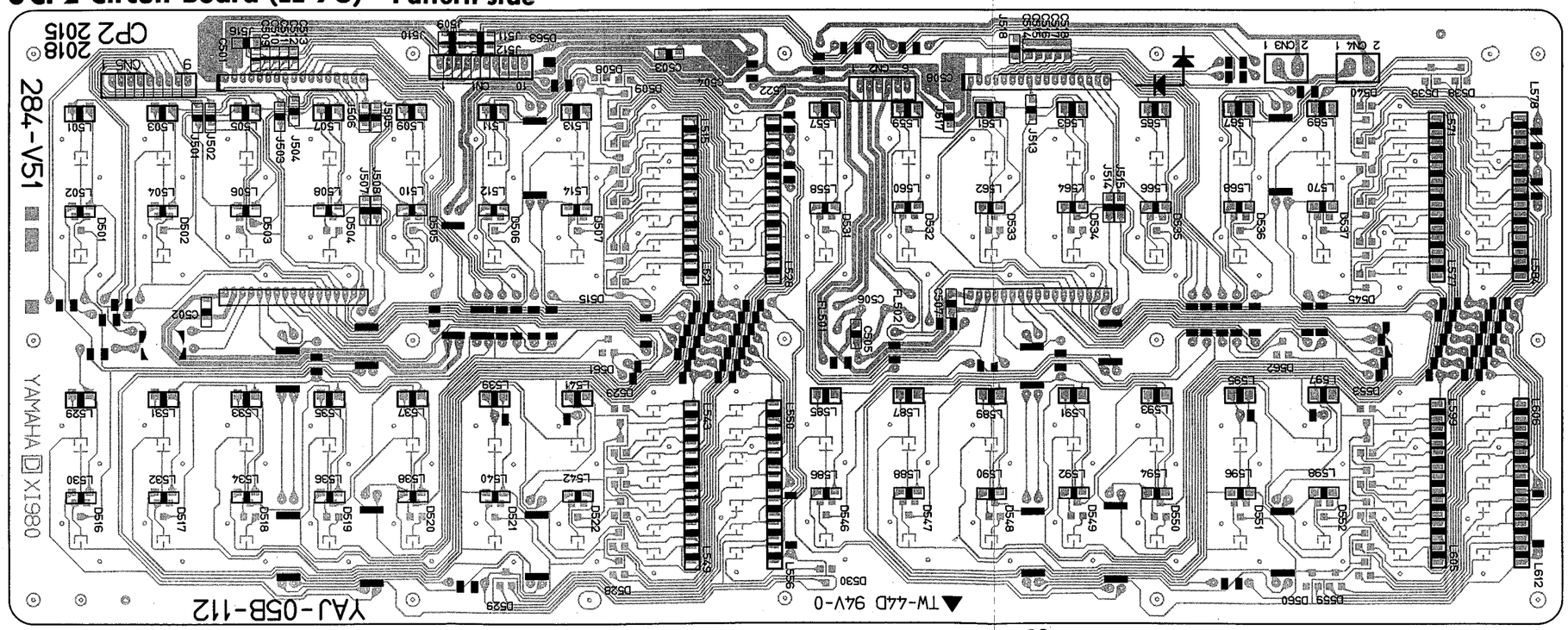

● CP1 Circuit Board (EL-70)
—Components side

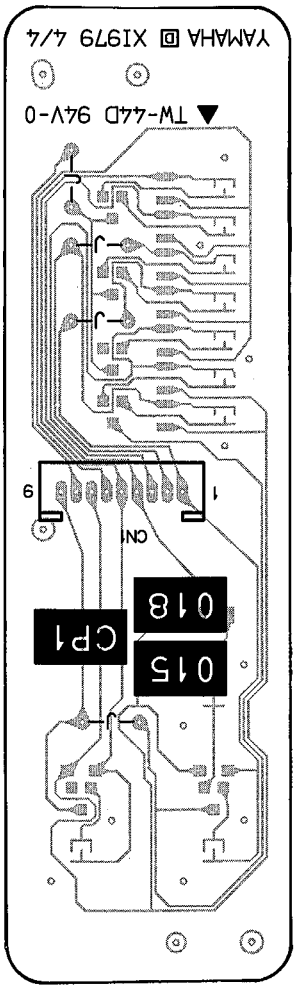

● CP1 Circuit Board (EL-70)
—Pattern side

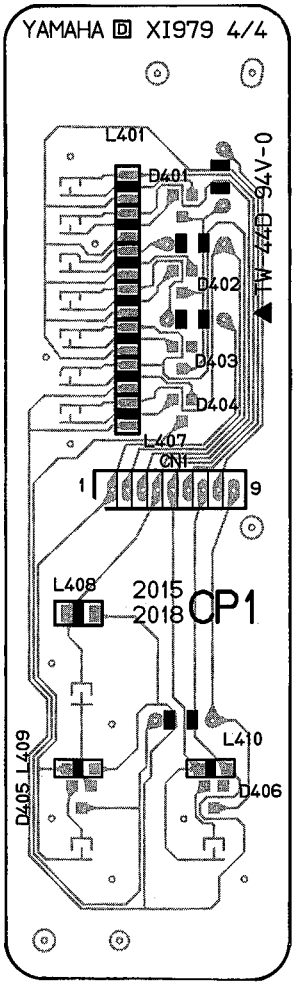

	Circuit Board:	CP1 (VK645100) XI979D0 4/4
1.	Diode D401~406:	HSM2836C
2.	Chip LED L401~410:	CL-150SD-CD RE (VJ979600)

CP1: VK64460 ⚠2
CP2: VK64540 ⚠2
RA: 2NA-VK74920 ⚠1
AUX: 2NA-VK74940 ⚠3
HP: 2NA-VJ66010 ⚠2

● RA Circuit Board (EL-70)

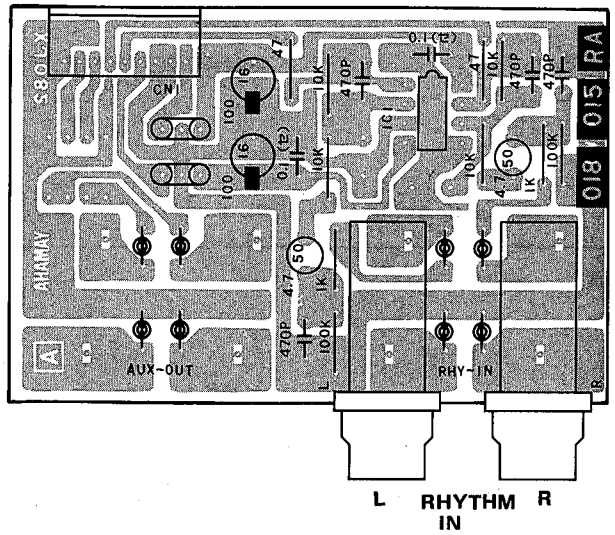

Circuit Board: RA (VK803800) XJ082A0

1. IC
   IC 1: RC4558DV (IG001390) OP AMP.
2. Semiconductive Cera. Cap.
   0.1(セ): 0.1μF 16V N (FZ005060) 2pcs
3. Coil
   SBT-0260TF 60μH (VF968800) 4pcs
4. EMI Filter
   LS MT Y223NB 22000p (FZ005920) 2pcs
5. Phone Jack
   RHY-IN L: YKB21-5014 BL (VC687500)
   RHY-IN R: YKB21-5154 GY (VD376100)

Components side

● AUX Circuit Board (EL-70)

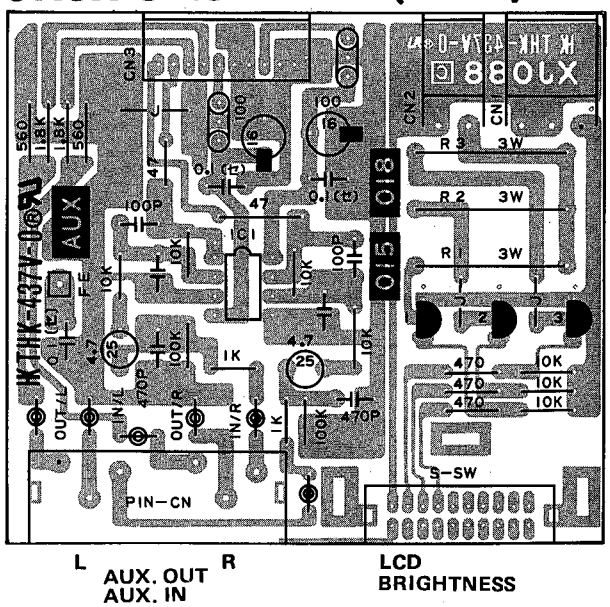

Circuit Board: AUX (VK749500) XJ088C0

1. IC
   IC 1: RC4558DV (IG001390) OP AMP.
2. Transistor
   1~3: 2SA1296 Y,GR (VK806700)
3. Metal Film Resistor
   R 1: 2.2Ω 3W J (VL060200)
   R 2: 3.3Ω 3W J (VL060300)
   R 3: 4.7Ω 3W J (VL060400)
4. Semiconductive Cera. Cap.
   0.1(セ): 0.1μF 16V N (FZ005060) 3pcs
5. Coil
   : SBT-0260TF 60μH (VF968800) 6pcs
6. LC Filter
   : DSS306-93F223Z1 22000p (VD542700) 2pcs
7. Slide Switch
   S-SW: SSSF14 (VH101900) LCD BRIGHTNESS
8. Pin Jack
   PIN-CN: YKC21-0476 (VJ885400) AUX IN/OUT(L/R)

Components side

● HP Circuit Board (EL-70)

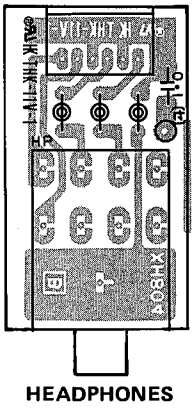

Components side

Circuit Board: HP (VJ660100) XH804B0

1. Semiconductive Cera. Cap.
   0.1(セ): 0.1μF 16V N (FZ005060) 1pc.
2. Coil
   : SBT-0260TF 60μH (VF968800) 3pcs
3. Phone Jack
   HP: YKB21-5008 BL (VB891100) HEADPHONES

● CP3 Circuit Board (EL-70) —Components side

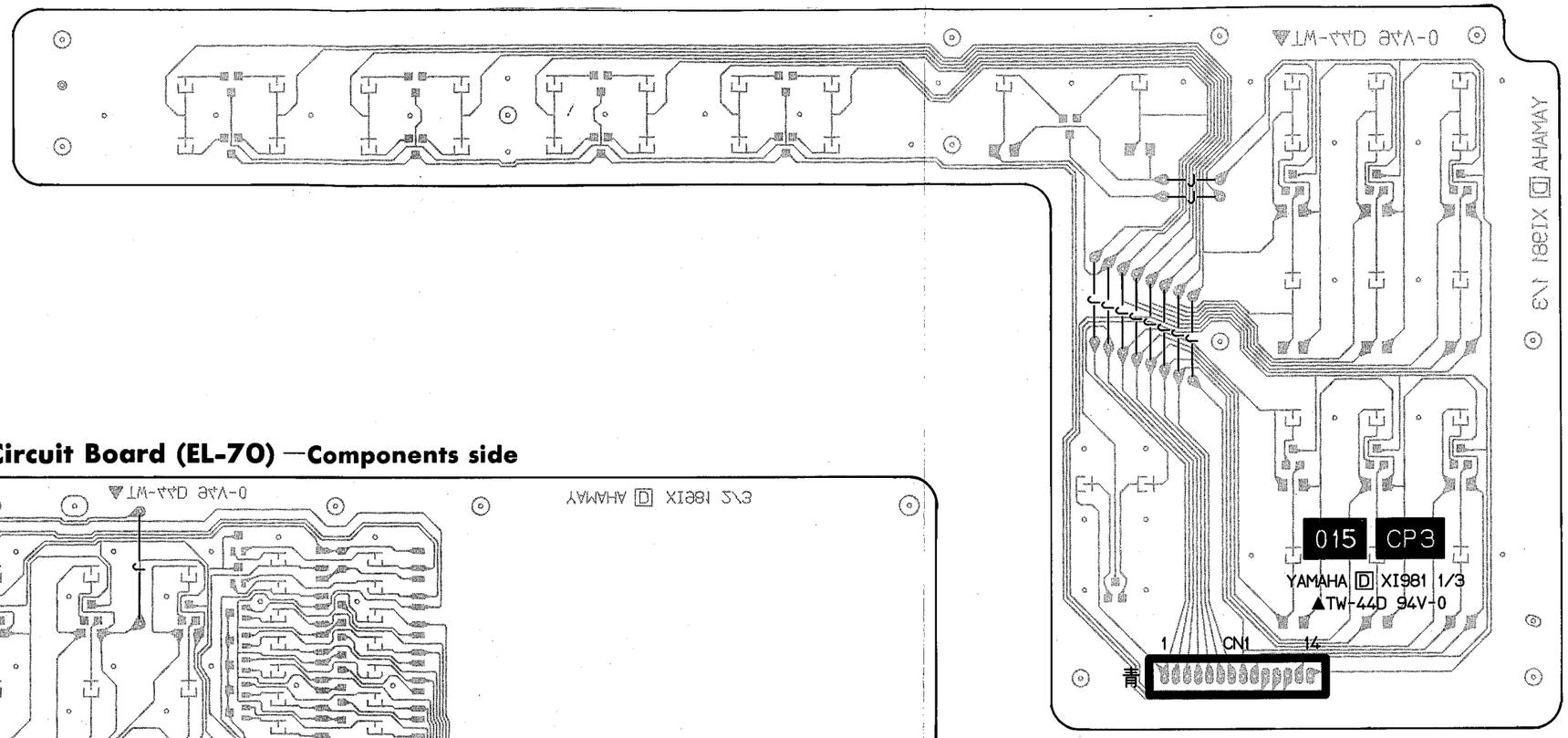

● CP4 Circuit Board (EL-70) —Components side

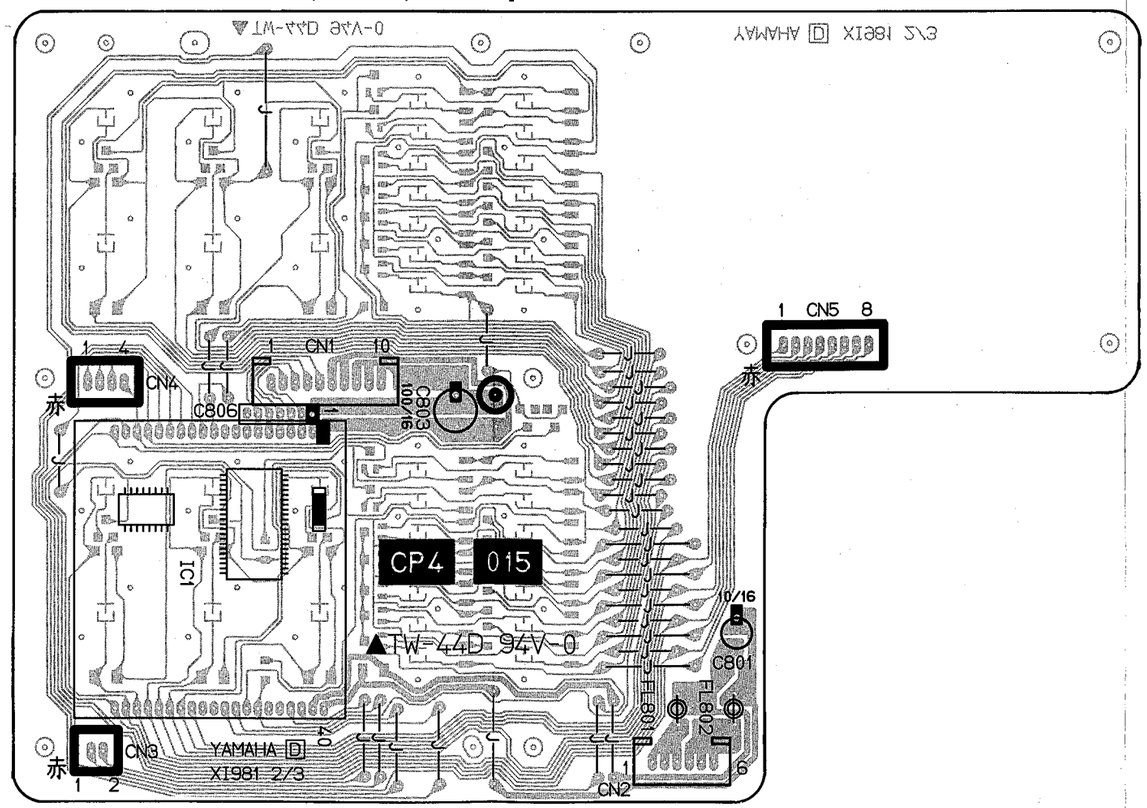

● MVR Circuit Board (EL-70) —Components side

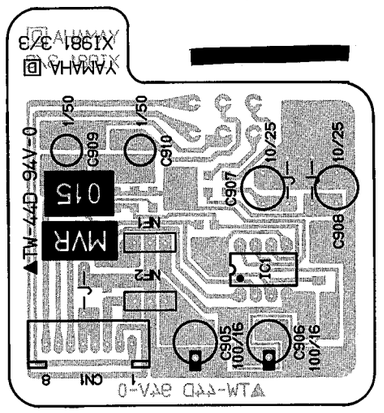

EL-90/EL-70

● CP4 Circuit Board (EL-70) —Pattern side

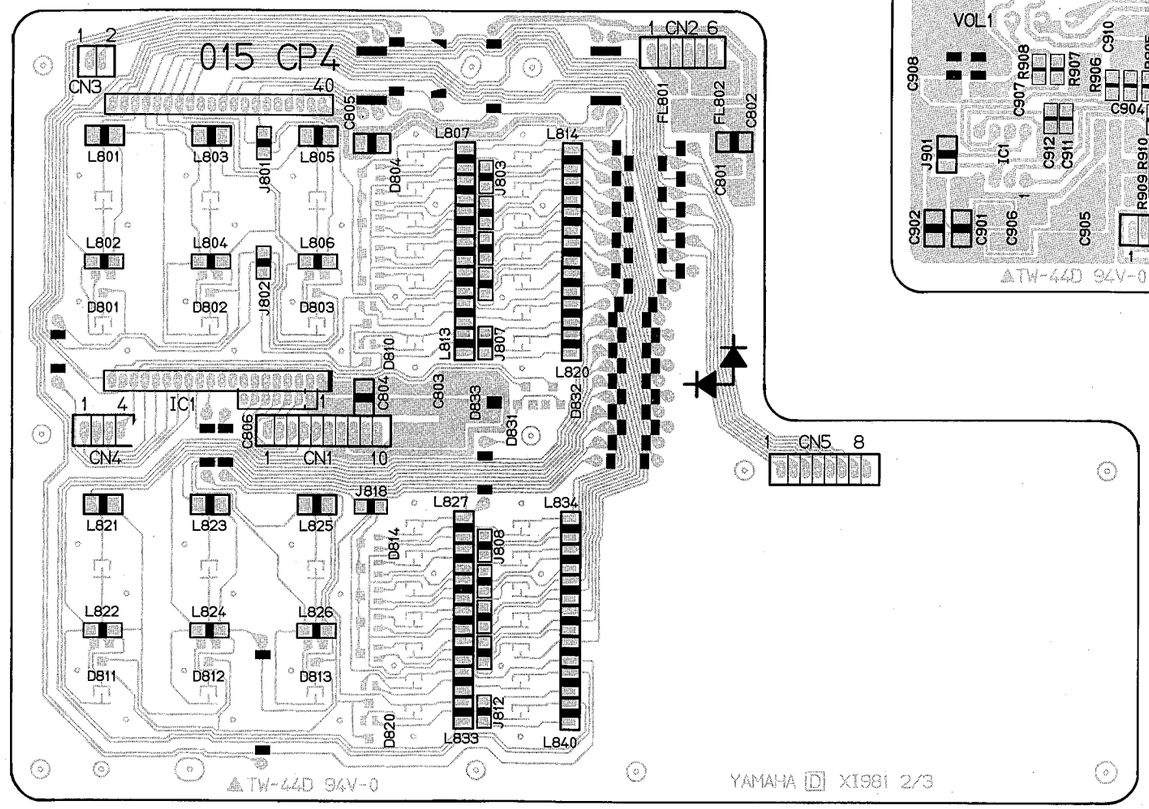

● MVR Circuit Board (EL-70) —Pattern side

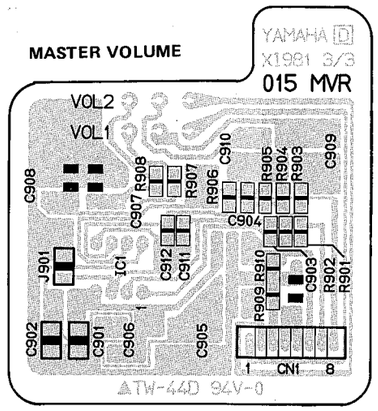

Circuit Board: MVR (VK646300) XI981D0 3/3
1. IC
   IC 1: RC4558DV (IG001390) OP AMP.
2. Variable Resistor
   VOL 1,2: A10K×3 MASTER VOLUME
3. EMI Filter
   NF 1,2: DSS306-93F223Z1 22000p (VD542700)

Circuit Board: CP4 (VK646200) XI981D0 2/3
1. IC
   IC 1: PLD-100 BX7882W (XH997A00) LED DRIVER
2. Diode
   D801~820,831,832: HSM2836C
3. Chip LED
   L801~840: CL-150SD-CD RE (VJ979600)
4. Ceramic Cap. Array
   C806: EXF-P6680MF (VL439600)
5. Coil
   FL801,802: SN3-205 10μH

● CP3 Circuit Board (EL-70) —Pattern side

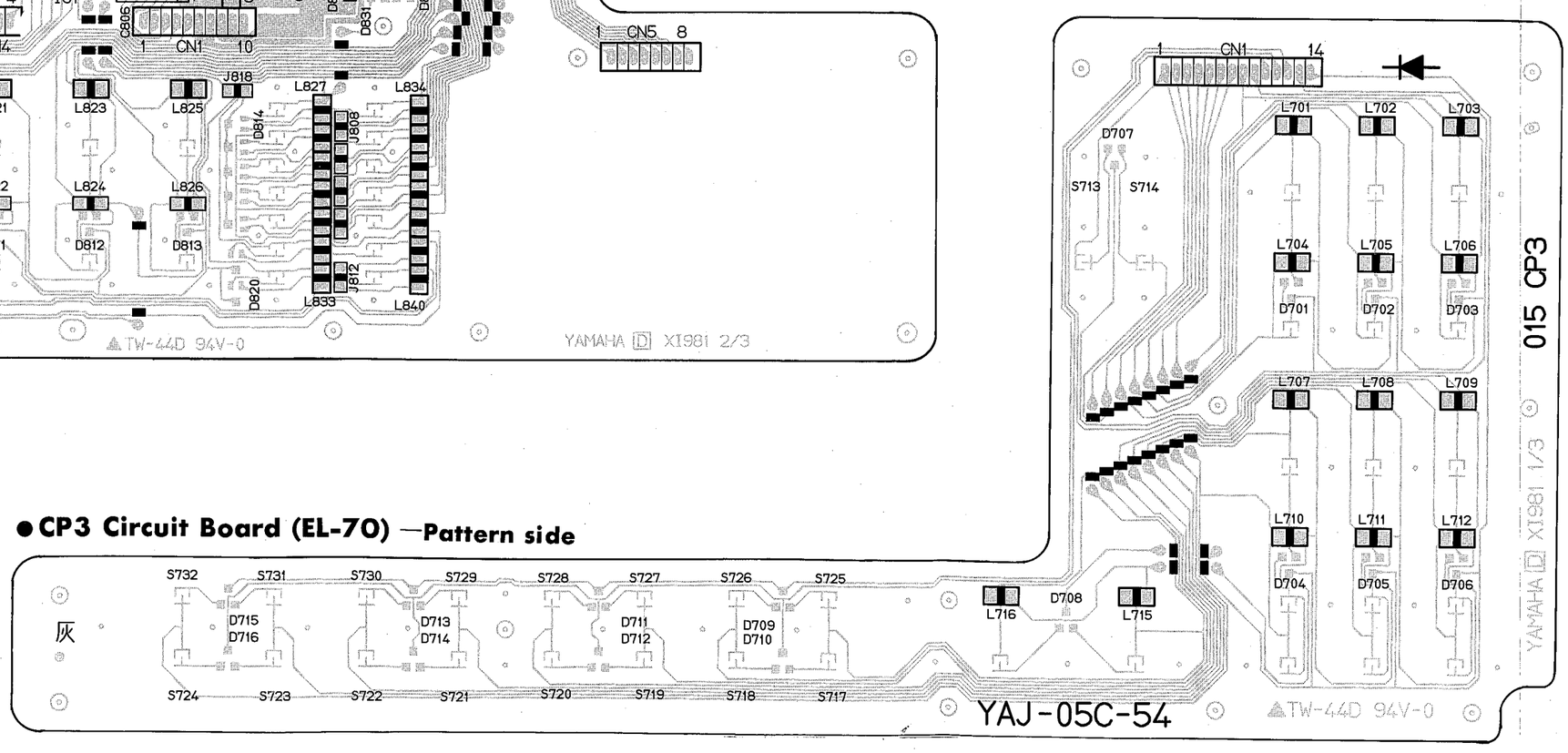

Circuit Board: CP3 (VK646100) XI981D0 1/3
1. Diode
   D701~716: HSM2836C
2. Chip LED
   L701~712,715,716: CL-150SD-CD RE (VJ979600)

VK64600 ⚠2

● PN2 Circuit Board (EL-70)

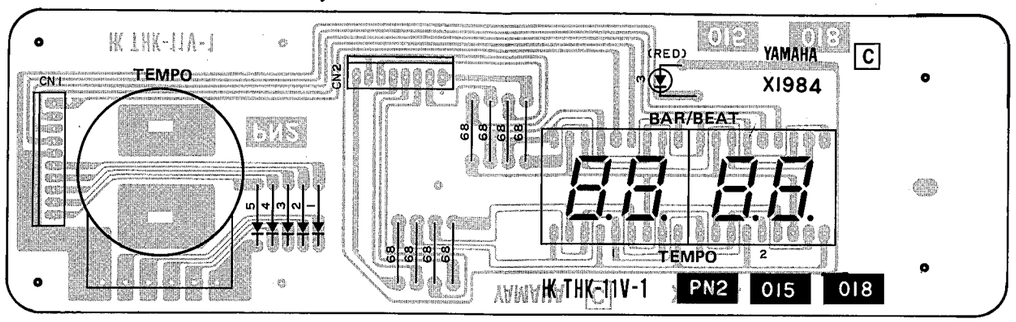

Components side

Circuit Board: PN2 (VK645200) XI984C0

1. Diode
   D 1～5: 1SS133 (IF003450)
2. LED
   ㊀ 3: SLZ-989C-03 RE (VL387200)
3. Rotaly Encoder: EC24BG5D (VC844200) TEMPO
4. LED Display: SL-9284-22 7seg (VC999500) TEMPO, BAR(2pcs
5. Connector Assembly
   CN 1: DS-KR 10P L=70mm PN2(CN1)－PN1(CN6)
   CN 2: DS-KR 8P L=150mm PN2(CN2)－PN1(CN7)

● PS1 Circuit Board (EL-70)

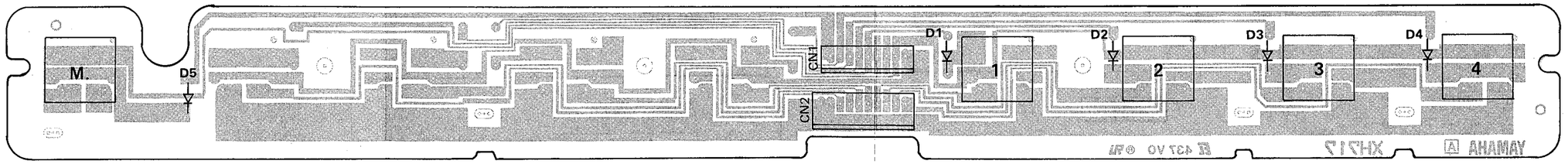

Components side

Circuit Board: PS1 (VJ661500) XH717A0

1. Diode
   D 1～5: 1SS176 (VA240700)
2. Push Switch
   1: 15AL (VF731200) 1
   2: 15AL (VF731300) 2
   3: 15AL (VF731400) 3
   4: 15AL (VF731500) 4
   M./TO DISK: 15AL (VL127300) M./TO DISK

● PS2 Circuit Board (EL-70)

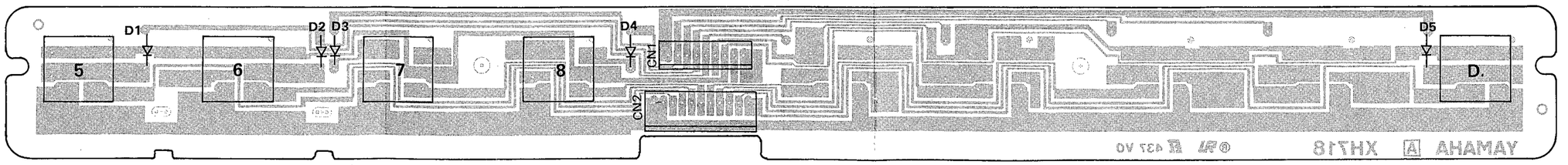

Components side

Circuit Board: PS2 (VJ661600) XH718A0

1. Diode
   D 1～5: 1SS176 (VA240700)
2. Push Switch
   5: 15AL (VF731600) 5
   6: 15AL (VF731700) 6
   7: 15AL (VF731800) 7
   8: 15AL (VF731900) 8
   D.: 15AL (VF732900) D

PN2: 2NA-VK74990
PS1: 2NA-VJ33210
PS2: 2NA-VJ33220

●MDR Circuit Board (EL-70) —Components side

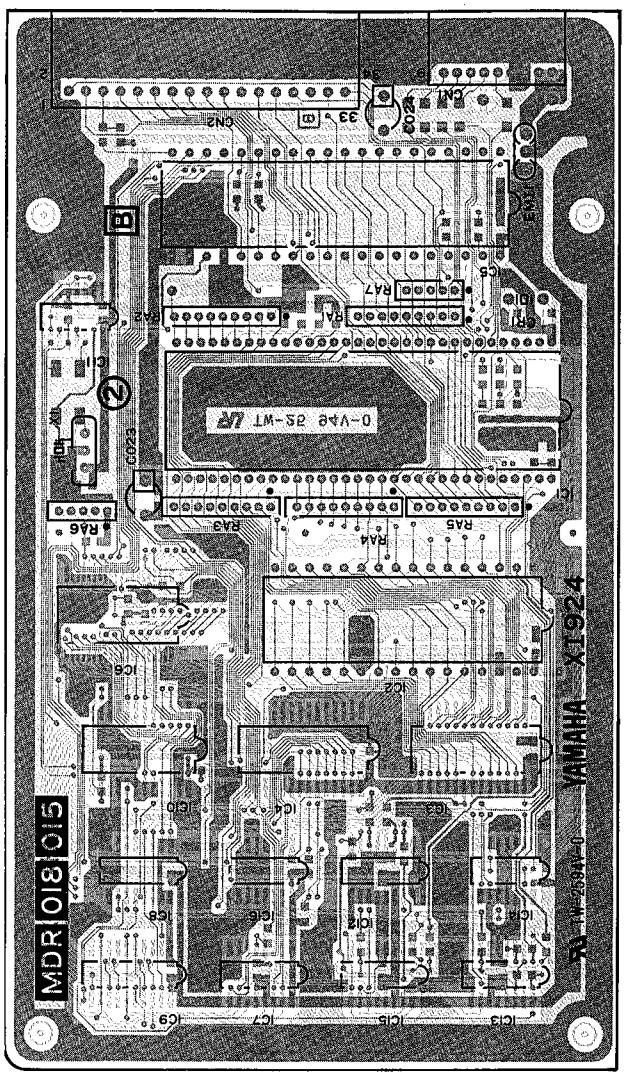

●MDR Circuit Board (EL-70) —Pattern side

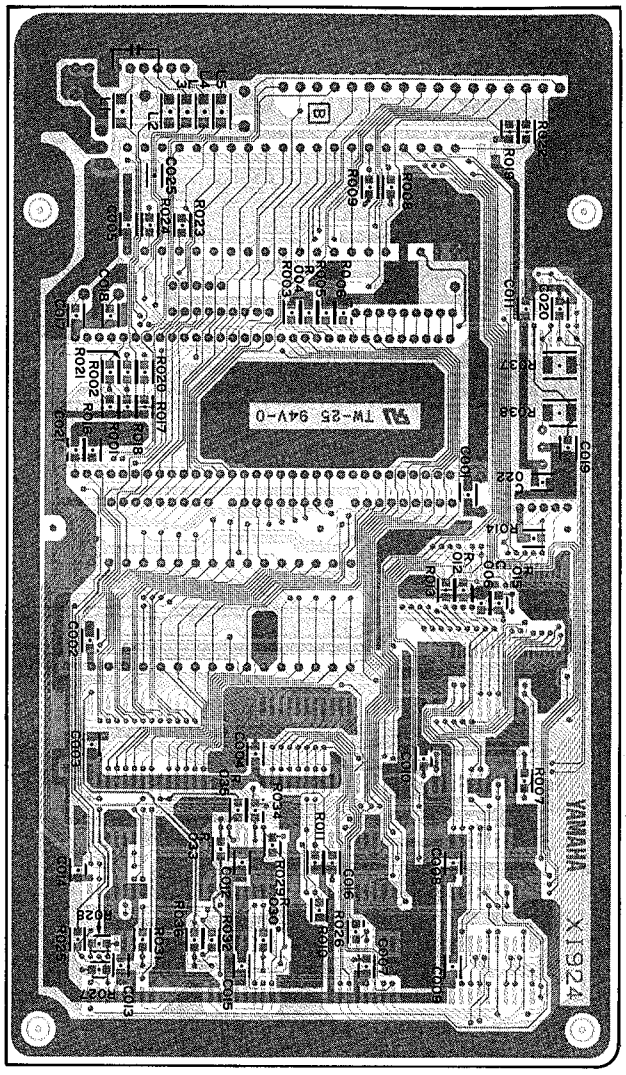

●LCD Circuit Board (EL-70) —Components side

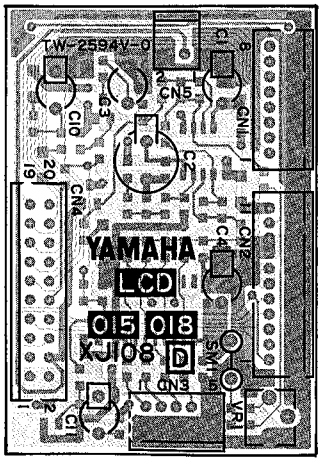

●LCD Circuit Board (EL-70) —Pattern side

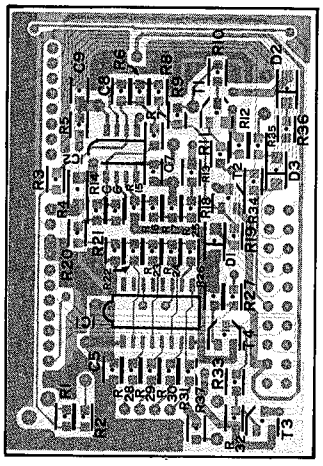

MDR: 2NA-VK74850 ⚠3
LCD: 2NA-VK74980 ⚠0

	Circuit Board:	MDR (VK748400) X1924B0 Japanese model S/# 1001~
		MDR (VK837500) XJ039C0 (4)
1.	IC	
	IC 1:	HD63C03YP (XB529A00) MPU
	IC 2:	(XJ161G00) MASKROM MDR 1M
	IC 3,4:	μPD43256AGU-10 (XH688A00) SRAM 1M
	IC 5:	WD37C65C (XE909C00) FDD CONTROL
	IC 6:	TMP82C37AM-5 (XI294A00) DMA
	IC 7:	SN74AC11138NSR (XI312A00) DECODER
	IC 8:	SN74HC138NSR (XD835A00) DECODER
	IC 9:	TC74HCT373AF-T1 (XI296A00) D.LATCH
	IC10:	TMP82C54M-2 (XE451A00) TIMER/COUNTER
	IC11:	TC74HC393AF-TP1 (XE052A00) BINARY COUNTER
	IC12:	SN74AC11032NSR (XI309A00) OR
	IC13:	SN74AC11000NSR (XI308A00) NAND
	IC14:	TC74HCT04AF-T1 (XI297A00) INVERTER
	IC15:	SN74AC11008NSR (XI310A00) AND
	IC16:	SN74HC125NSR (XH218A00) BUS BUFFER
2.	Resistor Array	
	RA 1~5:	RGLE8X103J (VF771900) 10K×8
	RA 6:	RGLE4X103J (VF773500) 10K×4
	RA 7:	RGLE4X151J (VL078100) 150×4
3.	LC Filter	
	EMI 1:	DSS306-93F223Z1 22000p (VD542700)
4.	Ceramic Resonator	
	CR 1:	12.0MHz (QU007700)
5.	Quartz Crystal Unit	
	X 1:	16.0MHz DOC-492 (VI927400)
6.	Chip Inductor	
	L 1~5:	BLM32A06 (VJ928500)

	Circuit Board:	LCD (VK749700) XJ108D0
1.	IC	
	IC 1:	TC4050BF(TP1) (XJ120A00) BUFFER
	IC 2:	NJM4558MT-1 (IG103520) OP AMP.
2.	Transistor	
	T 1~3:	2SA1162 O,Y (VJ927200)
	T 4:	2SC2712 Y (VJ927100)
3.	Diode	
	D 1~3:	RLS-73 (VB797600)
4.	Positive Thermistor	
	SM 1:	PTH60T222M 2.2K (VK775000)
5.	Trimmer Potentiometer	
	VR 1:	B10K 3P EVN (VL521900)
6.	Electrolytic Cap.	
	C 2:	220μF 16V (UJ838220)

EL-90/EL-70

● MK Circuit Board (EL-70)

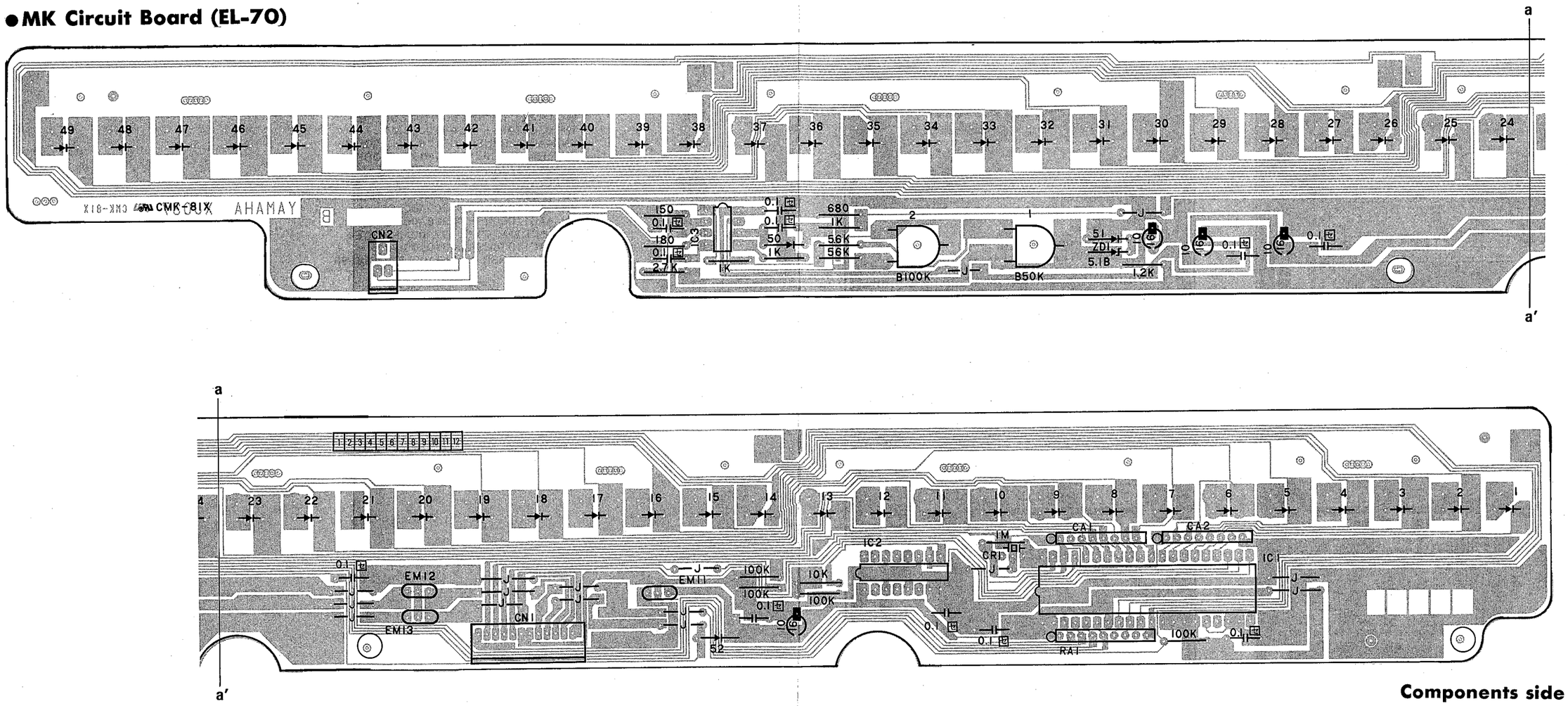

Components side

	Circuit Board:	MK (VK749000) XJ037B0
1.	IC	
	IC 1:	YM3603 (XA805001) KBS1
	IC 2:	TC4050BP (IG001740) BUFFER
	IC 3:	NJM4556 (IG042500) OP AMP.
2.	Diode	
	▶| 1~52:	1SS133 (IF003450)
3.	Zener Diode	
	ZD 1:	MTZ5.1B 5.1V (VA093900)
4.	Resistor Array	
	RA 1:	RMLS8 J 333 (VB433900) 33K×8
5.	Trimmer Potentiometer	
	⊣▷ 1:	B50K 3P EVL (HT190070)
	⊣▷ 2:	B100K 3P EVL (HT190080)
6.	Monolithic Cera. Cap.	
	0.1 ⊡:	0.1μF 50V Z (VI307100) 11pcs
7.	Ceramic Cap. Array	
	CA 1,2:	1000pF×7 50V Z (VB935500)
8.	LC Filter	
	EMI 1~3:	DSS306-93F223Z1 22000p (VD542700)
9.	Ceramic Resonator	
	CR 1:	3.25MHz (VB467100)

EL-90/EL-70

● PKL Circuit Board (EL-70)

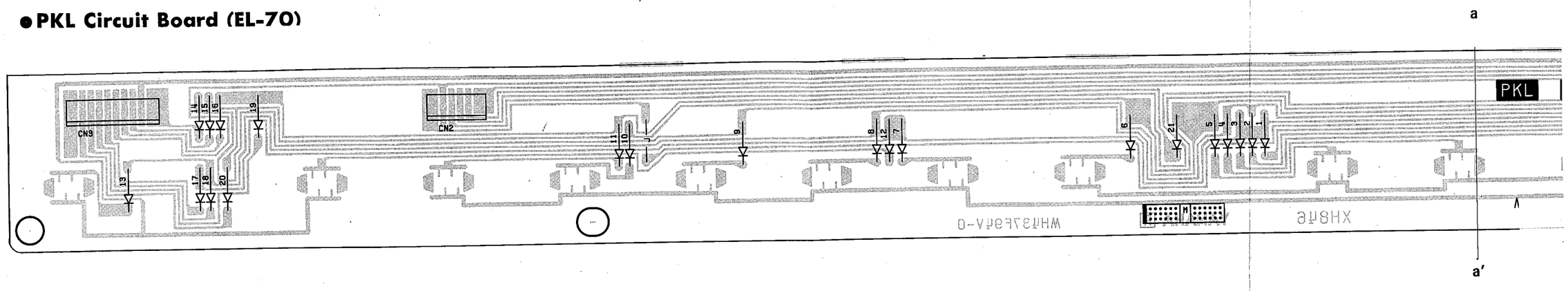

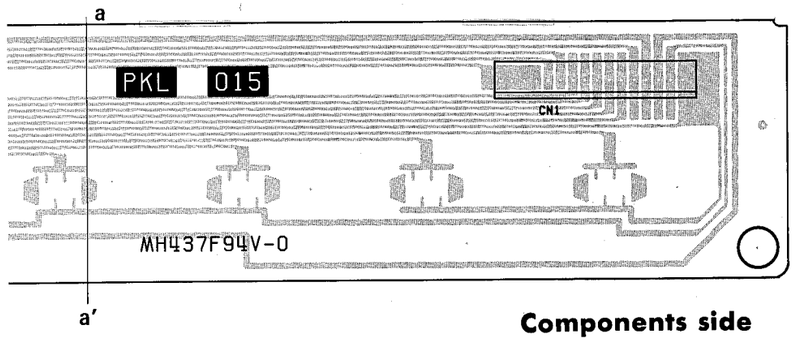

Components side

Circuit Board		PKL (VJ660800) XH846A0 (U,C,D,H,B,A,X,M)
1. Diode		
⊣▷⊢	1~21:	1SS133 (IF003450)

● PKH Circuit Board (EL-70)

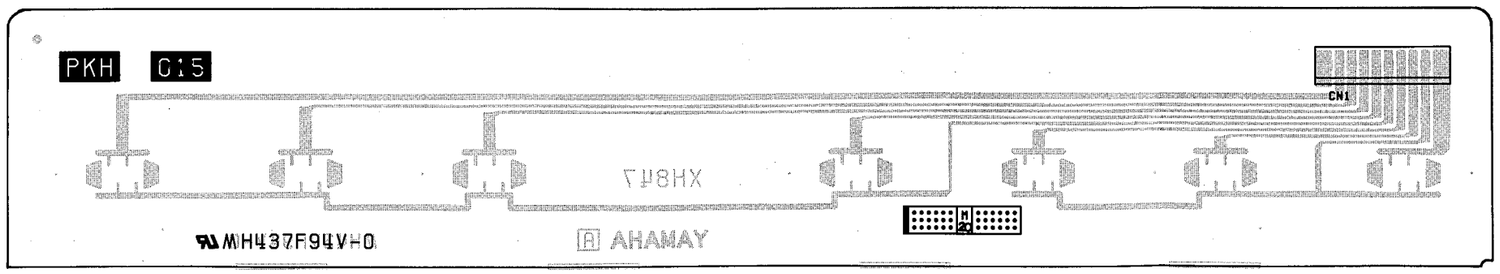

Components side

Circuit Board:		PKH (VJ661000) XH847A0 (U,C,D,H,B,A,X,M)

PKL: 2NA-VJ66090
PKH: 2NA-VJ66110

● PU Circuit Board (EL-70)

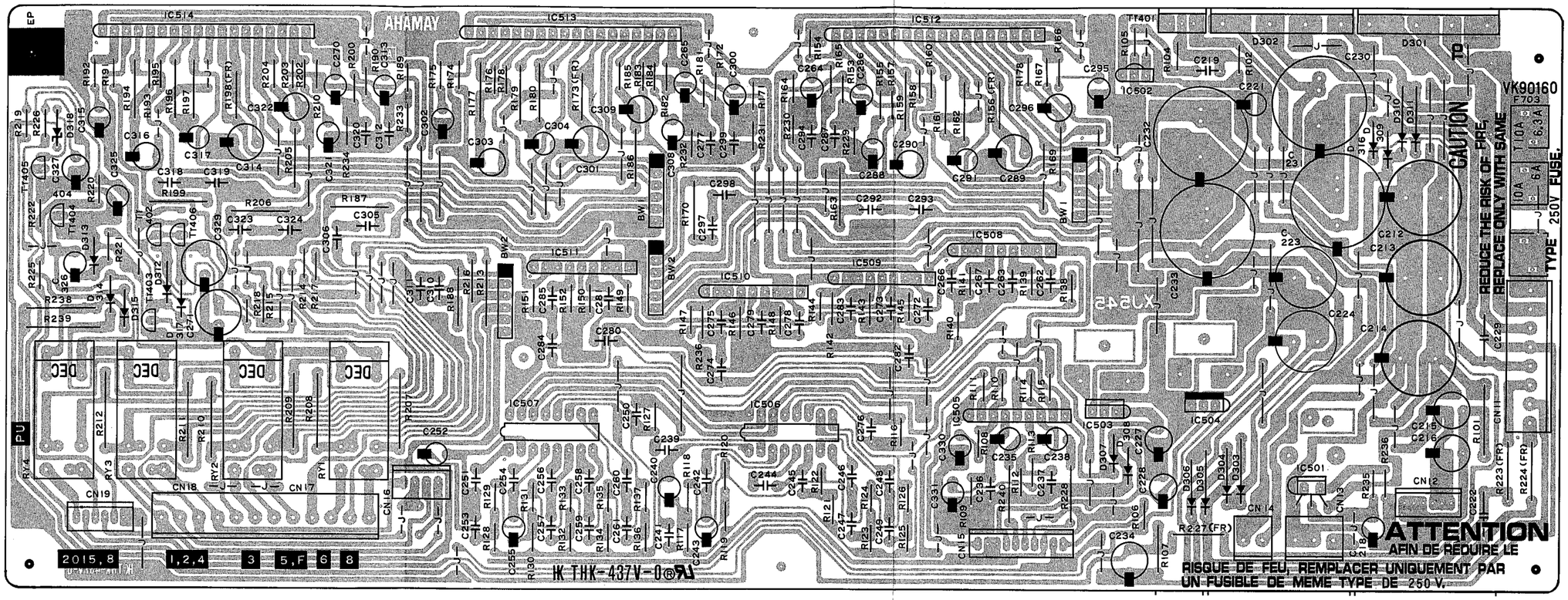

● FU Circuit Board (EL-70)

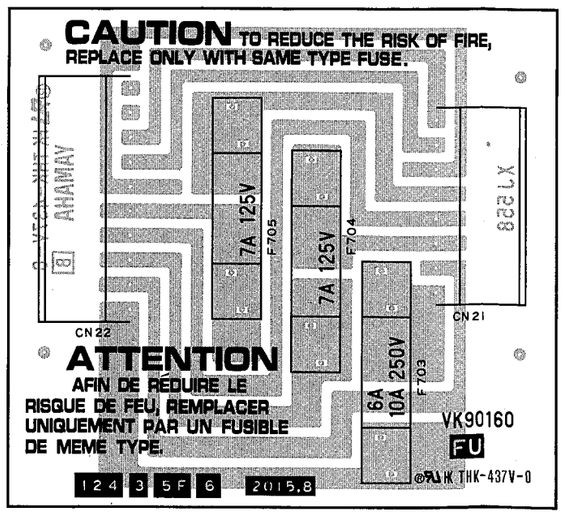

Components side

	Circuit Board:	PU XJ545A0
1.	IC	
	IC501:	SI-3050C (XI164A00) 5V REGULATOR
	IC502:	M5237L (XI165A00) REGULATOR
	IC503:	NJM7815FA (XD853A00) 15V REGULATOR
	IC504:	NJM7915FA (XD854A00) 15V REGULATOR
	IC505,508,511:	NJM4558S (IG076800) OP AMP.
	IC506,507:	M5227P (XF751A00) EQUALIZER
	IC512,514:	STK4192-2 (XI162A00) 50W 2CH P.AMP
2.	Transistor	
	Tr401:	2SA1451 O,Y (VJ828100)
	Tr402~406:	2SC1815 GR (VJ926400)
3.	Diode	
	D303~317:	11ES4 (VB481900)
4.	Diode Bridge	
	D301,302:	RBV-602 6A 200V (VL834300)
5.	Zener Diode	
	D318:	MTZ24B 24V (VB407600)
6.	Metal Oxide Film Resistor	
	R159,169,194,205:	3.3KΩ 1W J (VC748800)
	R161,162,196,197:	1KΩ 1W J (VC747400)
	R163,170,199,206:	10Ω 1W J (VC742500)
	R207,208:	390Ω 2W J (VC760200)
	R211,212,239:	220Ω 2W J (VC759500)
	R238:	560Ω 1W J (VC746800)
7.	Fuse Resistor	
	R101:	3.3Ω 1W J (VJ828900)
	R156,198:	100Ω 1/4 J (HW095100)
	R223,224	
	(J,U,C,D,B,A,X,M):	0.47Ω 1W J (VL130300)
	(H):	Jumper Wire
	R227 (U,C):	0.47Ω 1W J (VL130300)
	(others):	Jumper Wire
8.	Electrolytic Cap.	
	C212~214:	6800μF 10V (VL232100)
	C215,216:	220μF 10V (UJ828220)
	C223,224:	2200μF 25V (VL232300)
	C230~233:	3300μF 50V (VL232200)
	C271,329:	1000μF 6.3V (UJ819100)
9.	Ceramic Cap.	
	C222,229:	0.01μF 500V P (VA302600)
10.	Semiconductive Cera. Cap.	
	C292,293,297,298	
	318,319,323,324:	0.1μF 25V Z (VC694800)
11.	Relay	
	RY 1,3,4:	DC DH24D2-OT(M) 24V (KC001940)
12.	Fuse	
	F703 (H):	T 6.3A S 250V (KB001890)
	(others):	Jumper Wire
13.	Connector Assembly	
	BW1-BW1,BW2-BW2:	SCN-SCN 6P L=100mm

Components side

	Circuit Board:	FU XJ558B0 (U,C only)
1.	Fuse	
	F703:	10.0A 250V (KB001390)
	F704,705:	7.0A 125V (KB001520)

PU: 2NA-VJ63880 ⚠7
FU: 2NA-VL45370 ⚠6

■EL-70 BLOCK DIAGRAM

1450

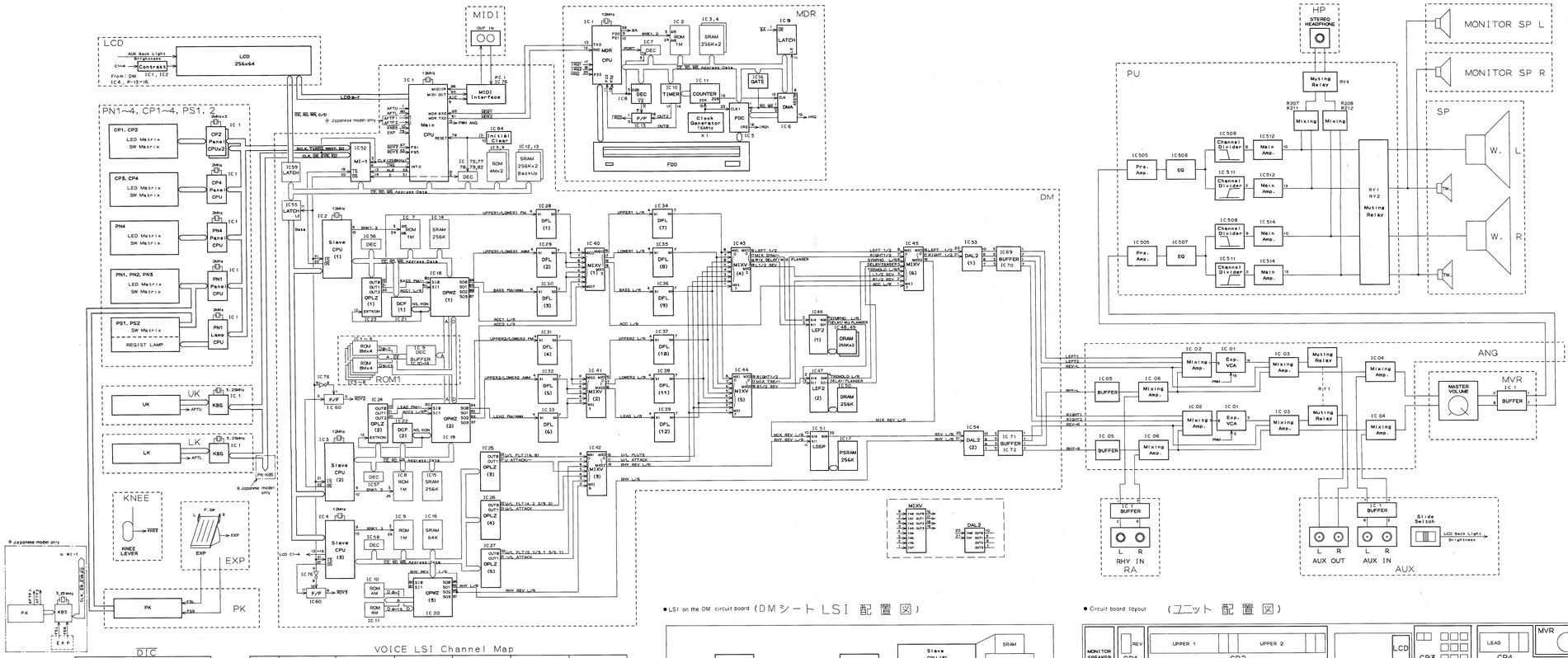

■EL-70 CIRCUIT BOARD WIRING（EL-70ユニット配線図）

1450

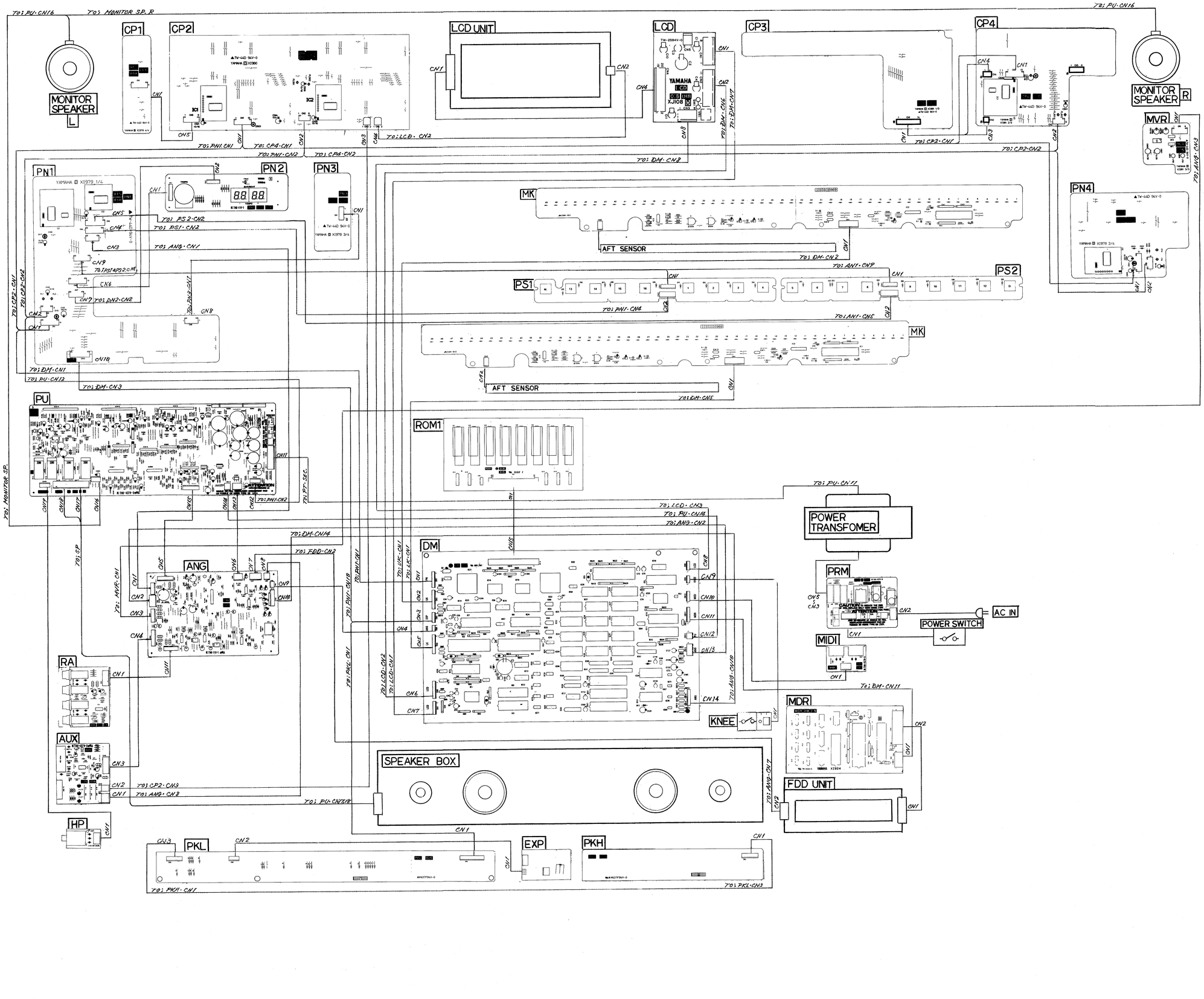

■EL-70 OVERALL CIRCUIT DIAGRAM 1/4 (DM, ROM1, MIDI)

1496

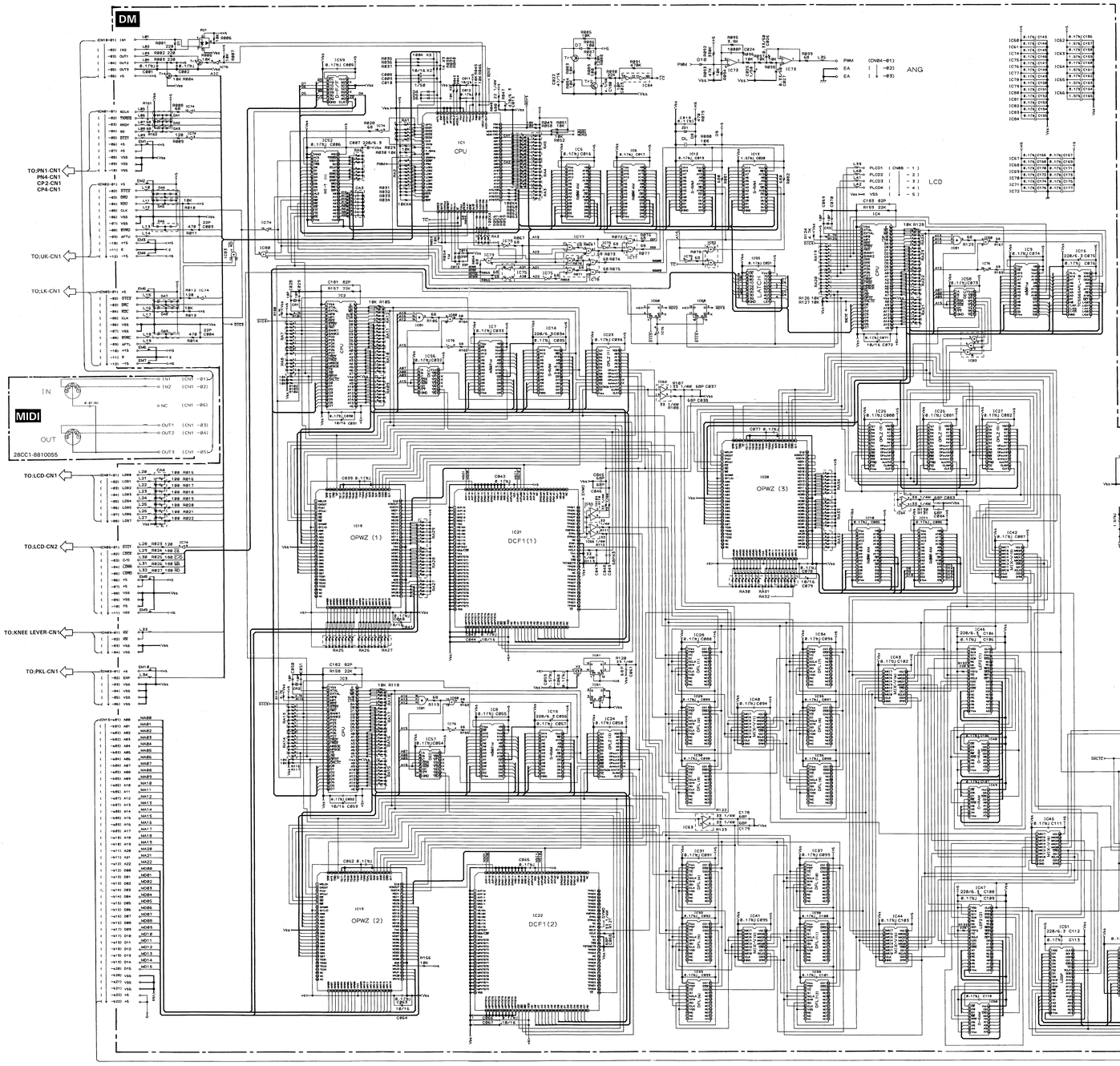

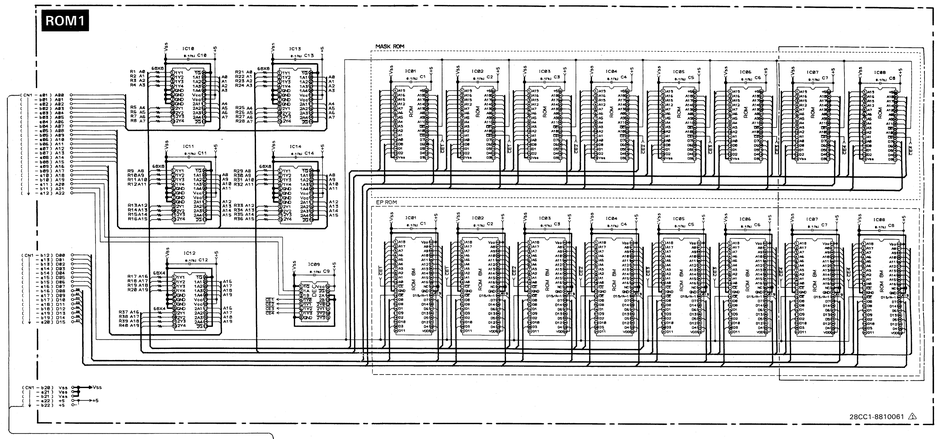

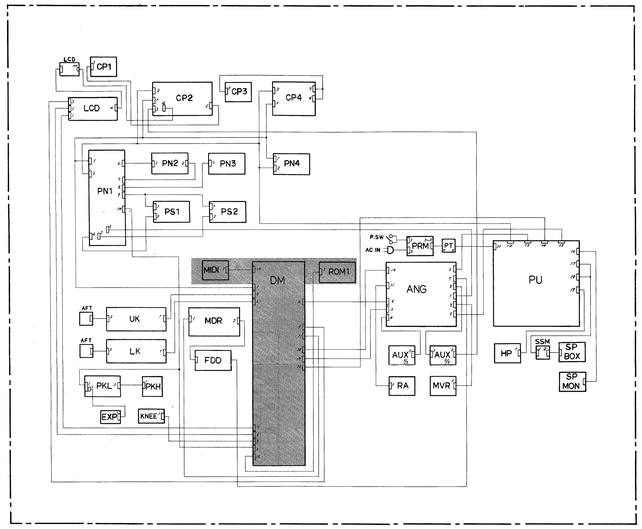

Circuit Board: DM (VK836800) XJ040D0 (4)

1. IC
   - IC 1: M37700SAFP (XI286A00) CPU
   - IC 2~4: HD63D03YP (XB529A00) MPU
   - IC 5: (XJ811B00) MASKROM MAIN
   - IC 6: (XJ127C00) MASKROM BANK
   - IC 7,8: HN62331PC17 (XJ129F00) MASKROM SLAVE1,2
   - IC 9: (XJ130D00) MASKROM SLAVE 3
   - IC10: HN62314BPE33 (XJ162C00) MASKROM RHY-L
   - IC11: HN62314BPE34 (XJ163C00) MASKROM RHY-H
   - IC12~15: μPD43256AGU-10 (XH868A00) SRAM 1M
   - IC16: TC5565AFL-10 (XJ122A00) SRAM 64K
   - IC17: TC51832FL-10 (X0021A00) PSRAM 256K
   - IC18~20: YM7132 (XH235B00) OPWZ
   - IC21,22: YSP207 (XI978A00) DCF1
   - IC23~27: YM7131 (XH236A00) OPLZ
   - IC28~39: YM2406 (XA804A00) DFL
   - IC40~45: TMC57800N (XG662A00) MIX5
   - IC46,47: YM3440 (XH238A00) LEF2
   - IC48~50: M5M4464AP-10 (XF981A00) DRAM 256K
   - IC51: YM3413 (XE449A00) LDSP
   - IC52: TC17G005AN-0023 (XB809A00) MI-1
   - IC53,54: YM3028 (XE789A00) DAL2
   - IC55: SN74HC373NSR (XG387A00) D.LATCH
   - IC56~58: SN74HC138NSR (XD835A00) DECODER
   - IC59: SN74HC174NSR (XD836A00) D.FF
   - IC60: SN74HC74NSR (XC726A00) D.FF
   - IC61: 74AC11074NS-R (X0974A00) D.FF
   - IC62~66: T6400(S) (IG079500) DRIVER
   - IC67,68: NJM4580M(T1) (XA802B00) OP AMP.
   - IC69~73: NJM4558MT-1 (IG103520) OP AMP.
   - IC74: TC74HC4050AF-T1 (XI239A00) BUFFER
   - IC75: SN74AS04NSR (XI313A00) INVERTER
   - IC76: SN74HC04NSR (XD830A00) INVERTER
   - IC77~79: SN74AS32NSR (XI314A00) OR
   - IC80: SN74HC32NSR (XD833A00) OR
   - IC81: SN74AC11011NSR (XI307A00) AND
   - IC82: SN74LS03NSR (XI316A00) NAND
   - IC83: SN74HC08NSR (XD831A00) AND
   - IC84: SN74HC14NSR (XC725A00) INVERTER
2. Photo Coupler
   - PC 1: PC-400Z (VJ927500)
3. Transistor
   - TR 1: 2SA1162 O,Y (VJ927200)
   - TR 2~6: 2SC2712 Y (VJ927100)
4. Diode
   - D 1,4~12: RLS-73 (VB797600)
   - D 13,14: 11ES4 (VB481900)
5. Diode Array
   - DA 1~3: DA204U 2.0A×2 (VL076300)
6. Zener Diode
   - ZD 1: MTZ5.6B 5.6V (VI993500)
7. Resistor Array
   - RA 1~11,13~17, 19~23,25~34: RGLE8X103J (VF771900) 10K×8
   - RA12,18,24: RGLE4X103J (VF773500) 10K×4
8. Electrolytic Cap.
   - C 7,34,56,75, 104,108,112,137: 220μF 6.3V (UJB18220)
   - C13: 470μF 6.3V (UJB18470)
   - C129,132~134, 185,186: 220μF 16V (UJ838220)
9. Gold Cap.
   - DL 1: 1.0F 5.5V (VH604600)
10. Ceramic Cap. Array
    - CA 1~3: 100pF×8 50V M (VH484100)
    - CA 4: 220pF×8 50V M (VJ944300)
11. Chip Inductor
    - L 1~42: BLM32A06 (VJ928500)
12. LC Filter
    - EM 1~22: DSS306-93F223Z1 22000p (VD542700)
13. Ceramic Resonator
    - CR 1~3: 12.0MHz (VL097700)
14. Quartz Crystal Unit
    - X 1: AT-49/12.0MHz (VE463500)
    - X 2: 25.6MHz DOC-492 (VK634300)

Circuit Board: ROM1 (VK803700) XI922B0 Japanese model S/# 1001~
ROM1 (VK837100) XJ004C0 (4)

1. IC
   - IC 1: HN62408PD61 (XJ164C00) MASKROM AWM1 8M
   - IC 2: HN62408PD62 (XJ165C00) MASKROM AWM2 8M
   - IC 3: HN62408PD63 (XJ166C00) MASKROM AWM3 8M
   - IC 4: LH53802L (XJ167C00) MASKROM AWM4 8M
   - IC 5: LH53802S (XJ168C00) MASKROM AWM5 8M
   - IC 6: LH53802Y (XJ169C00) MASKROM AWM6 8M
   - IC 7: UPD23C8000CZ06B (XJ170C00) MASKROM AWM7 8M
   - IC 8: UPD23C8000CZ069 (XJ171C00) MASKROM AWM8 8M
   - IC 9: SN74HC138NSR (XC727A00) DECODER
   - IC10~14: SN74AC11244NSE (XI311A00) BUS BUFFER

EL-70

■EL-70 OVERALL CIRCUIT DIAGRAM 2/4 (PN1, PN2, PN3, PN4, CP1, CP2, CP3, CP4, PS1, PS2, LCD)

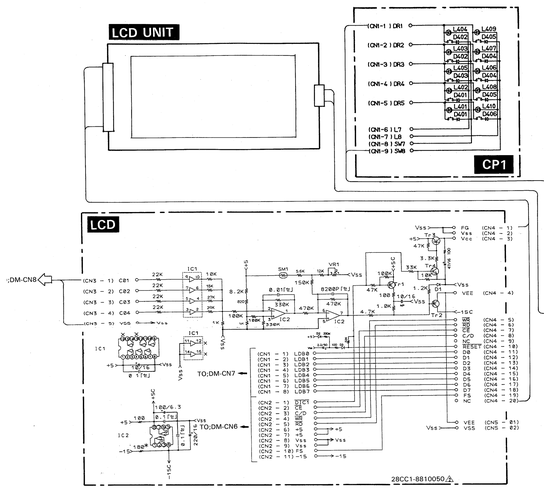

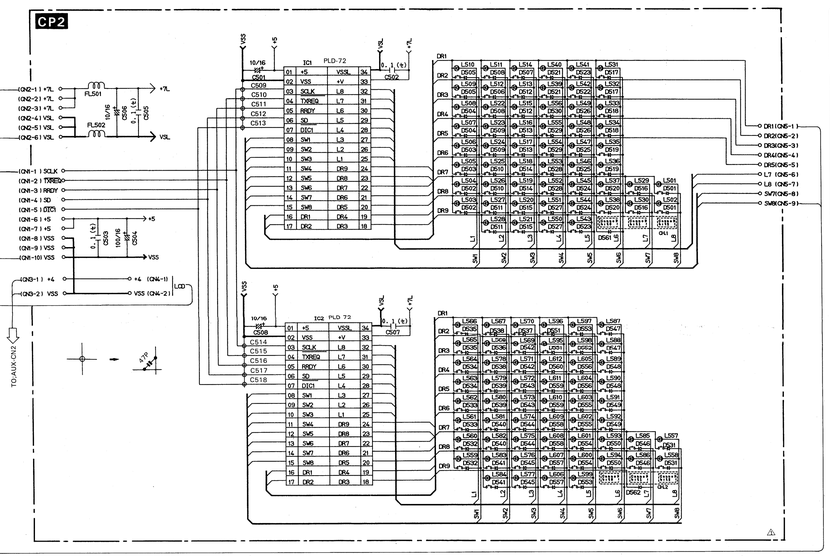

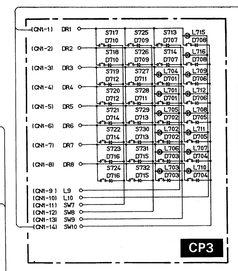

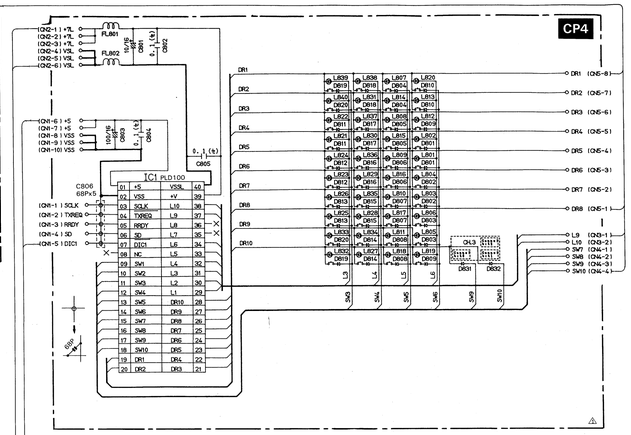

Circuit Board: LCD (VK749700) XJ108D0
1. IC
IC 1: TC40508F(TP1) (XJ120A00) BUFFER
IC 2: NJM4558MT-1 (IG103520) OP AMP.
2. Transistor
T 1~3: 2SA1162 O Y (VJ927200)
T 4: 2SC2712 Y (VJ927100)
3. Diode
D 1~3: RLS-73 (VB797600)
4. Positive Thermistor
SM 1: PTH60T222M 2.2K (VK775000)
5. Trimmer Potentiometer
VR 1: B10K 3P EVN (VL521900)
6. Electrolytic Cap.
C 2: 220uF 16V (UJ838220)

Circuit Board: CP1 (VK645100) XI979D0 4/4
1. Diode
D401~406: HSM2836C
2. Chip LED
L401~410: CL-150SD-CD RE (VJ979600)

Circuit Board: CP2 (VK645400) XI980D0
1. IC
IC 1,2: PLD-72 BX7883W (XH998A00) LED DRIVER
2. Diode
D501~562: HSM2836C
3. Chip LED
L501~612: CL-150SD-CD RE (VJ979600)
4. Coil
FL501,502: SN3-205 10uH

Circuit Board: CP3 (VK646100) XI981D0 1/3
1. Diode
D701~716: HSM2836C
2. Chip LED
L701~712,715,716: CL-150SD-CD RE (VJ979600)

Circuit Board: CP4 (VK646200) XI981D0 2/3
1. IC
IC 1: PLD-100 BX7882W (XH997A00) LED DRIVER
2. Diode
D801~820,831,832: HSM2836C
3. Chip LED
L801~840: CL-150SD-CD RE (VJ979600)
4. Ceramic Cap. Array
CB06: EXF-P66B0MF (VL439600)
5. Coil
FL801,802: SN3-205 10uH

Circuit Board: PN1 (VK644800) XI979D0 1/4
1. IC
IC 1: PLD-100 BX7882W (XH997A00) LED DRIVER
IC 2: PLD-17 BX7884W (XH999A00) LAMP DRIVER
2. Diode
D101~115: HSM2836C
3. Chip LED
L101~129: CL-150SD-CD RE (VJ979600)
4. Coil
FL 1,2: SN3-205 10uH

Circuit Board: PN2 (VK645200) XI984C0
1. Diode
D 1~5: 1SS133 (IF003450)
2. LED
D9: SLZ-389C-03 RE (VL387200)
3. Rotary Encoder: EC248SGD (VC844200) TEMPO
4. LED Display: SL-9284-22 7seg (VC999500) TEMPO, BAR(2pcs
5. Connector Assembly
CN 1: DS-KR 10P L=70mm PN2(CN1)—PN1(CN6)
CN 2: DS-KR 8P L=150mm PN2(CN2)—PN1(CN7)

Circuit Board: PN3 (VK644900) XI979D0 3/4
1. Diode
D201~203: HSM2836C
2. Chip LED
L201~205: CL-150SD-CD RE (VJ979600)

Circuit Board: PN4 (VK645000) XI979D0 2/4
1. IC
IC 1: PLD-72 BX7883W (XH998A00) LED DRIVER
2. Diode
D301~309: HSM2836C
D310~313: HRP100
3. Chip LED
L301~310, 313~315: CL-150SD-CD RE (VJ979600)
L311,312: CL-155SD/PG-CD RE/GR
4. Coil
FL 1,2: SN3-205 10uH
5. LED Display: LC-204VL7 7seg. (VK900900) SONG SELECT

Circuit Board: PS1 (VJ661500) XH717A0
1. Diode
D 1~5: 1SS176 (VA240700)
2. Push Switch
1: 15AL (VF7312000) 1
2: 15AL (VF7313000) 2
3: 15AL (VF7314000) 3
4: 15AL (VF7315000) 4
M.:TO DISK: 15AL (VL127300) M.:TO DISK

Circuit Board: PS2 (VJ661600) XH718A0
1. Diode
D 1~5: 1SS176 (VA240700)
2. Push Switch
5: 15AL (VF7316000) 5
6: 15AL (VF7317000) 6
7: 15AL (VF7318000) 7
8: 15AL (VF7319000) 8
D.: 15AL (VF732900) D

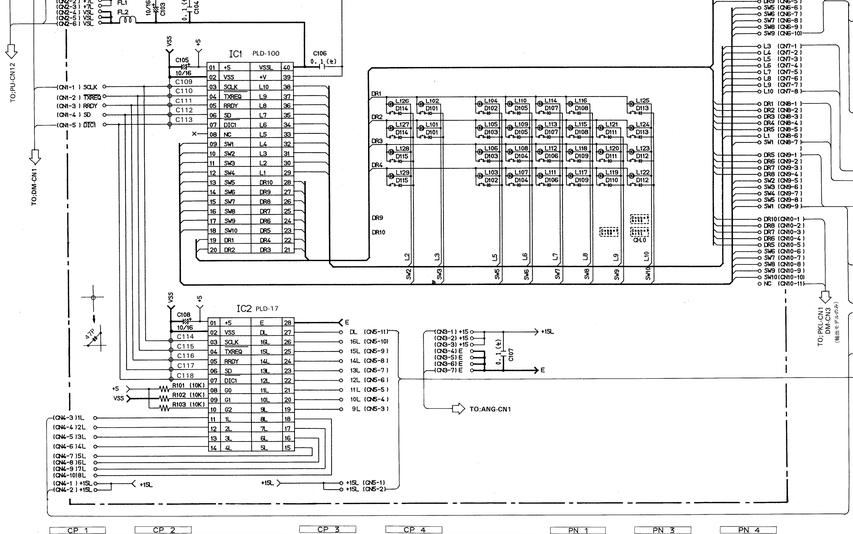

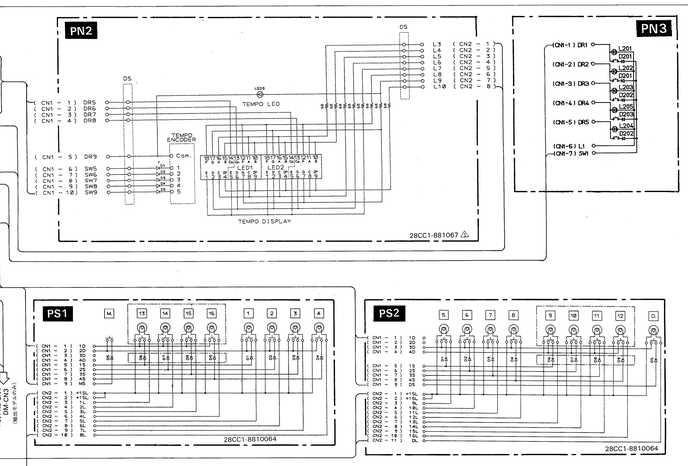

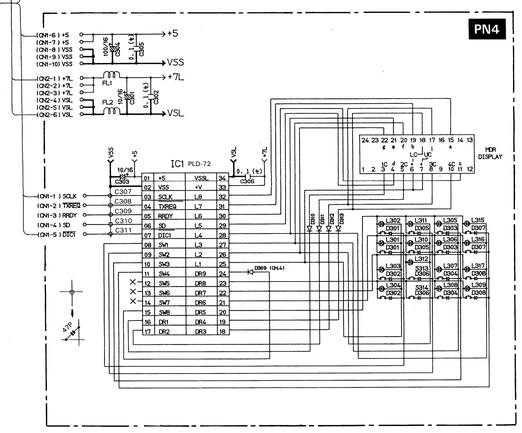

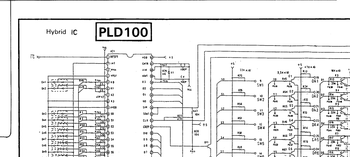

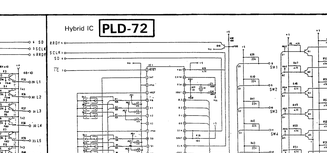

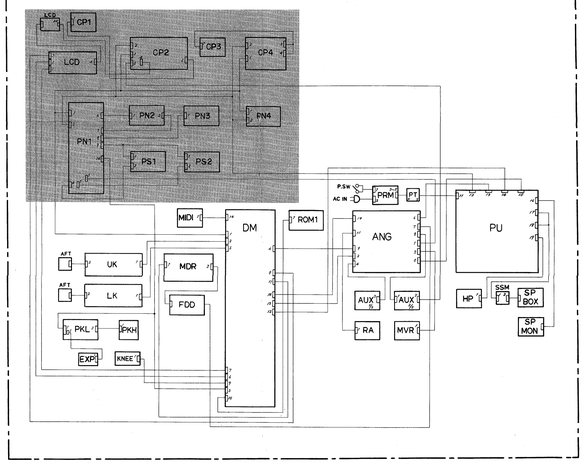

■EL-70 OVERALL CIRCUIT DIAGRAM 3/4 (UK, LK, PKL, PKH, MDR, EXP, KNEELEVER)

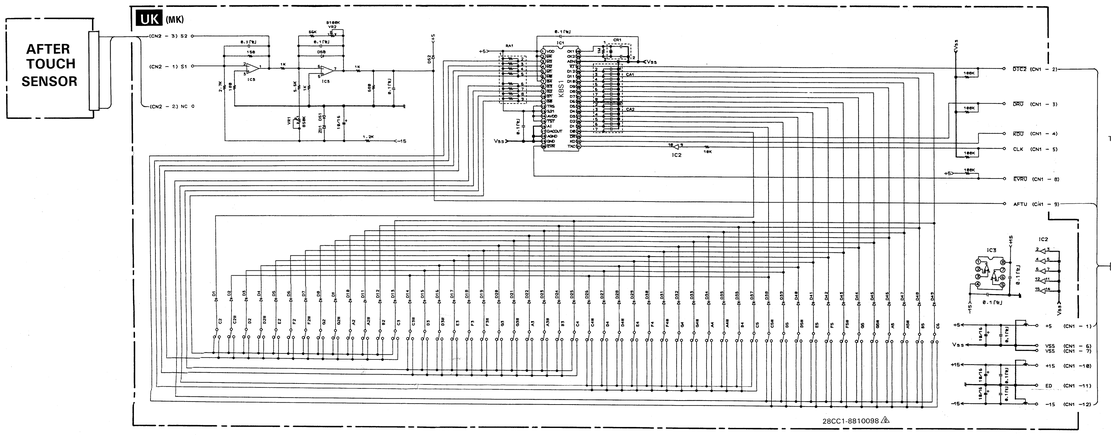

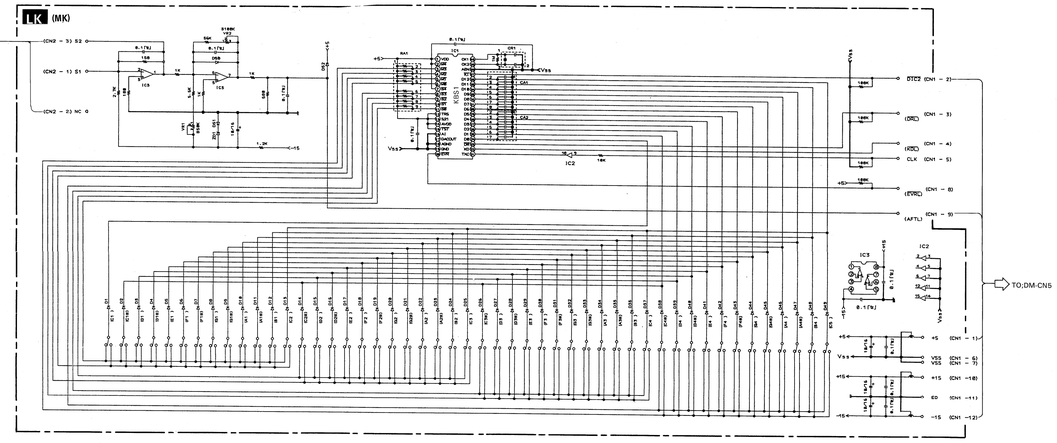

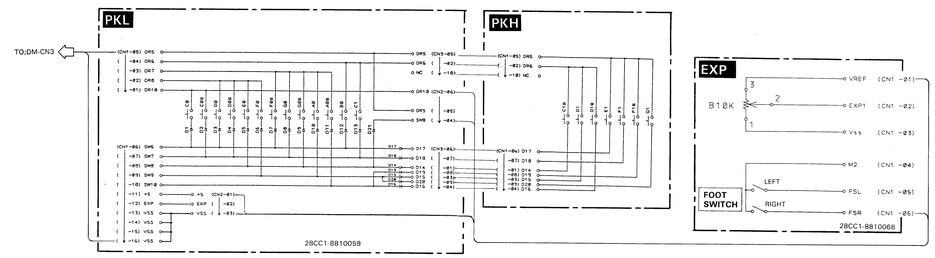

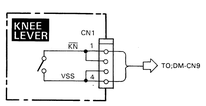

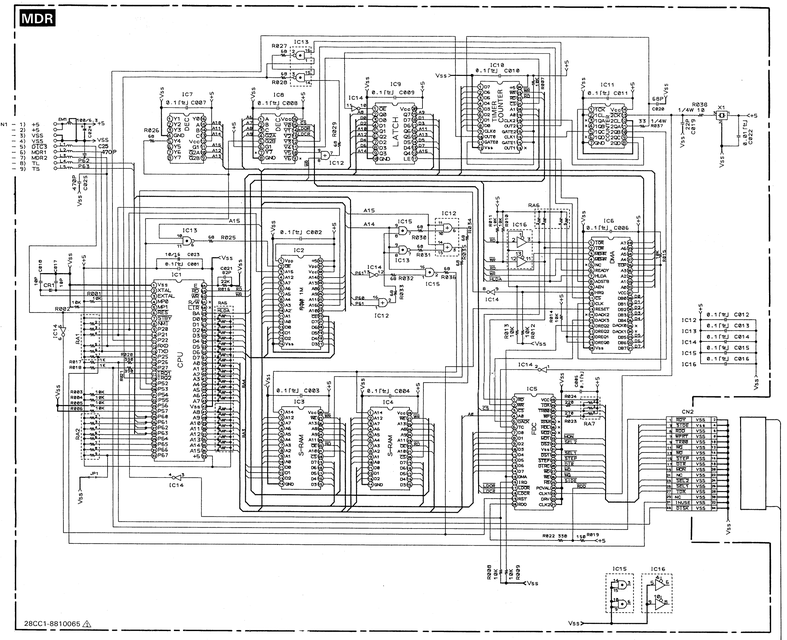

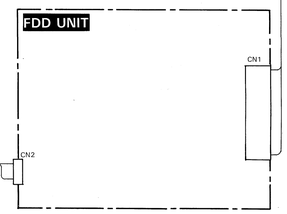

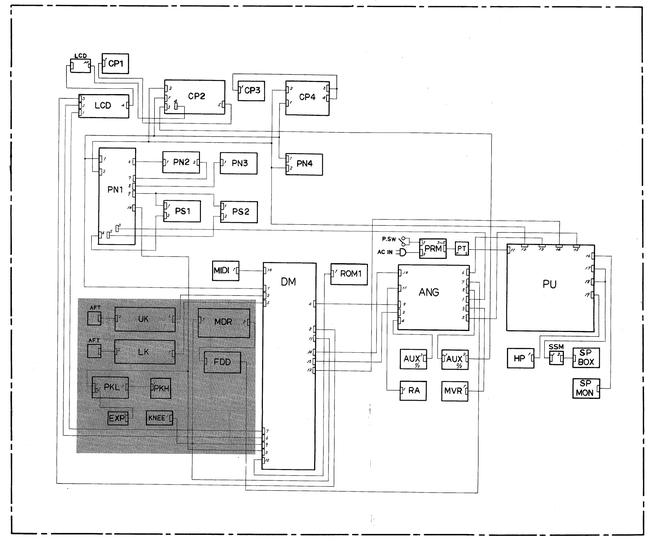

Circuit Board: PKL (VJ660B00) XH846A0 (U,C,D,H,B,A,X,M)

1. Diode
   ⊣◂ 1~21: 1SS133 (IF003450)

Circuit Board: PKH (VJ661000) XH847A0 (U,C,D,H,B,A,X,M)

Circuit Board: MDR (VK748400) XI924C0 Japanese model S/ # 1001~
MDR (VK837500) XJ039C0 (4)

1. IC
   IC 1: H063C03YP (XB529A00) MPU
   IC 2: (XJ161G00) MASKROM MDR 1M
   IC 3,4: μPD4326A0JJ-10 (XH688A00) SRAM 1M
   IC 5: WD37C65C (XE909C00) FDD CONTROL
   IC 6: TMP82C37AM-5 (XI294A00) DMA
   IC 7: SN74AC11138NSR (XI312A00) DECODER
   IC 8: SN74HC138NSR (XD835A00) DECODER
   IC 9: TC74HCT373AF-T1 (XI296A00) D LATCH
   IC10: TMP82C54M-2 (XE451A00) TIMER/COUNTER
   IC11: TC74HC393AF-TP1 (XE052A00) BINARY COUNTER
   IC12: SN74AC11032NSR (XI309A00) OR
   IC13: SN74AC11000NSR (XI308A00) NAND
   IC14: TC74HCT04AF-T1 (XI297A00) INVERTER
   IC15: SN74AC11008NSR (XI310A00) AND
   IC16: SN74HC125NSR (XH218A00) BUS BUFFER
2. Resistor Array
   RA 1~5: RGLE8X103J (VF771900) 10K×8
   RA 6: RGLE4X103J (VF773500) 10K×4
   RA 7: RGLE4X151J (VL078100) 150×4
3. LC Filter
   EMI 1: DSS306-93F223Z1 22000p (VD542700)
4. Ceramic Resonator
   CR 1: 12.0MHz (QU007700)
5. Quartz Crystal Unit
   X 1: 16.0MHz DOC-492 (VI927400)
6. Chip Inductor
   L 1~5: BLM32A06 (VJ928500)

Circuit Board: MK (VK749000) XJ037B0

1. IC
   IC 1: YM3603 (XA805001) KBS1
   IC 2: TC40500P (IG001740) BUFFER
   IC 3: NJM4556 (IG042500) OP AMP.
2. Diode
   ⊣◂ 1~52: 1SS133 (IF003450)
3. Zener Diode
   ZD 1: MTZ5.1B 5.1V (VA093900)
4. Resistor Array
   RA 1: RMLS8 J 333 (VB433900) 33K×8
5. Trimmer Potentiometer
   ▭ 1: B50K 3P EVL (HT190070)
   ▭ 2: B100K 3P EVL (HT190080)
6. Monolithic Cera. Cap.
   0.1▭: 0.1μF 50V Z (VI307100) 11pcs
7. Ceramic Cap. Array
   CA 1, 2: 1000pF×7 50V Z (VB935500)
8. LC Filter
   EMI 1~3: DSS306-93F223Z1 22000p (VD542700)
9. Ceramic Resonator
   CR 1: 3.25MHz (VB467100)

Circuit Board: EXP (VJ965100) XI345A0 (2CH)

1. Variable Resistor: B10K RK16Y11L (VA228B00)

Circuit Board: KNELEV (VJ695800) XI347A0

EL-70

■EL-70 OVERALL CIRCUIT DIAGRAM 4/4 (ANG, AUX, RA, MVR, HP, PU, PRM)

1450

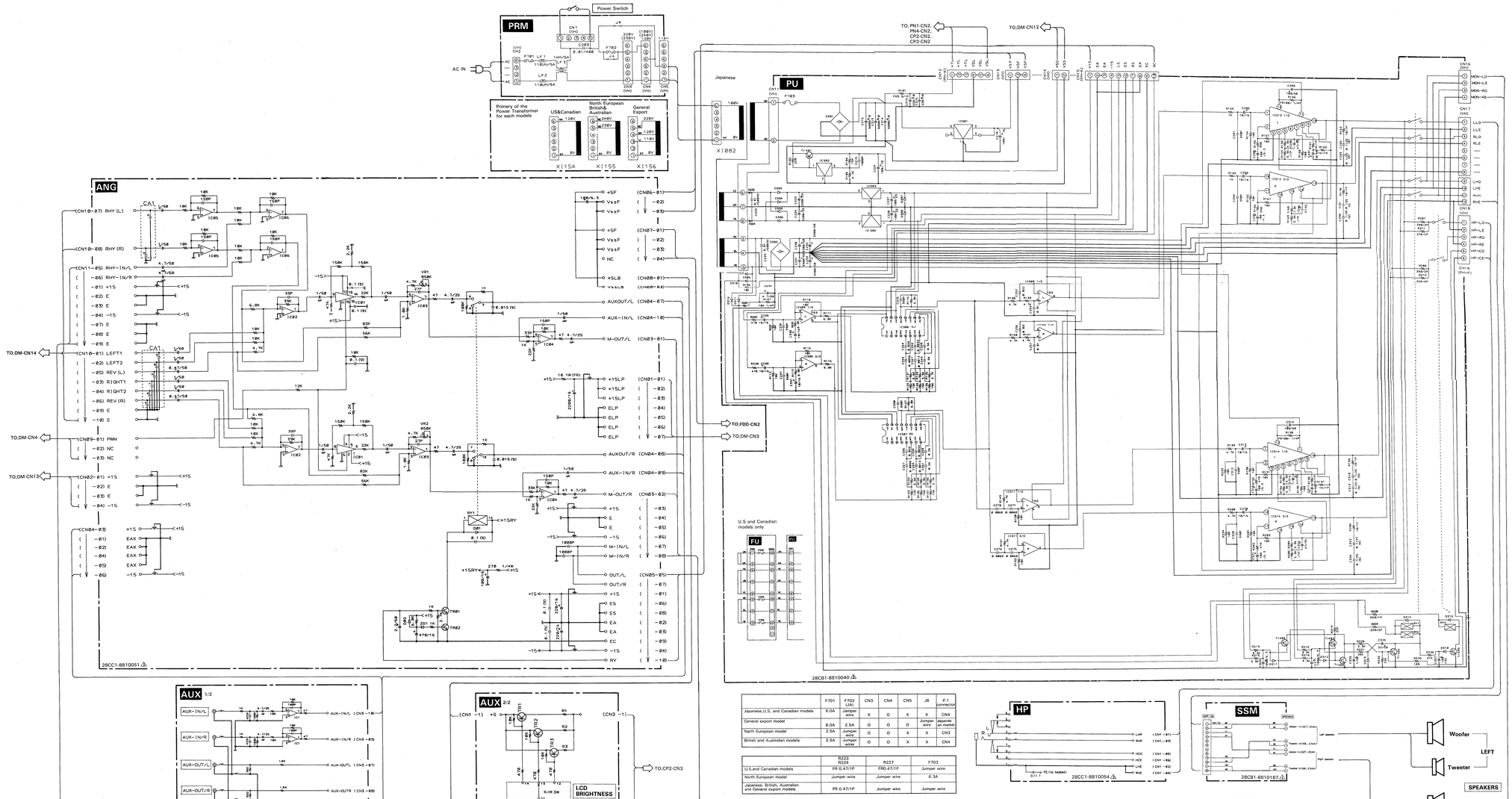

	F701	F702 (JA)	CN3	CN4	CN5	JB	P.T connector
Japanese,U.S, and Canadian models	6.0A	Jumper wire	X	O	X	Jumper wire	CN4 depends on market
General export model		6.0A	2.5A	O	O	O	
North European model		2.5A	Jumper wire	O	O	X	CN3
British and Australian models		2.5A	Jumper wire	O	O	X	CN4

	R223 R224	R227	F703
U,S,and Canadian models	FR 0.47/1P	FR0.47/1P	Jumper wire
North European model	Jumper wire	Jumper wire	6.3A
Japanese, British, Australian and General export models	FR 0.47/1P	Jumper wire	Jumper wire

Circuit Board: ANG (VK748800) XJ041C0

1. IC
   IC 1: M5283P (XI315A00) VCA
   IC 2~6: RC4558DV (IG001390) OP AMP.
2. Transistor
   TR 1,2: 2SC1815 Y,GR (IC1815M0)
3. Diode
   D 1,2: 1SS133 (ID003450)
   D 3,4: 11ES4 (VB481900)
4. Zener Diode
   ZD 1: MTZ10B 10V (IA095900)
5. Fuse Resistor
   (FR): 10Ω 1W J (VI637400) 3pcs
6. Trimmer Potentiometer
   VR 1,2: B50K 3P EVN (VL522200)
7. Electrolytic Cap.
   220/16: 220μF 16V (UJ838220) 2pcs
   470/16: 470μF 16V (UJ838470) 3pcs
   2200/16: 2200μF 16V (VF1737001 1pc.
8. Semiconductive Cera. Cap.
   0.1(≠): 0.1μF 16V N (FZ005060) 15pcs
9. Ceramic Cap. Array
   CA 1: 1000pF×8 50V M (VL122400)
10. LC Filter
    (LC): DSS306-93F223Z1 22000p (VD542700) 11pcs
11. Relay
    RY 1: DC GSA-237P (VB996300)

Circuit Board: RA (VK803800) XJ082A0

1. IC
   IC 1: RC4558DV (IG001390) OP AMP.
2. Semiconductive Cera. Cap.
   0.1(≠): 0.1μF 16V N (FZ005060) 2pcs
3. Coil
   (≠): SBT-0260TF 60μH (VF968800) 4pcs
4. EMI Filter
   (LC): LS MT Y223NB 22000p (FZ005920) 2pcs
5. Phone Jack
   RHY-IN L: YKB21-5014 BL (VCB87100)
   RHY-IN R: YKB21-5154 GY (VD376100)

Circuit Board: PRM (VJ636200) XI791A0 (J)
PRM (VJ636300) XI791A0 (U,C)
PRM (VJ636400) XI791A0 (D,H,B,A)
PRM (VJ636500) XI791A0 (X,M)

1. Ceramic Cap.
   C203: 0.01μF 125V (VA302800)
2. Coil
   LF 1,2: SN10-500J (VJ898200)
   or SF1.1TO-50-01 (VX900000)
   LF 3: SC-05-10J (VJ888300)
   TF2528S-102Y580 (VK315900)
3. Fuse
   F701 (J,X,M): 6.0A 250V (KB001280)
   (U,C): 6.0A 250V (KB001250)
   (D,H,B,A): T 2.5A S 250V (KB000690)
   F702 (X,M): T 2.5A S 250V (KB000690)
   (others): Jumper Wire

Circuit Board: HP (VJ660100) XH80480

1. Semiconductive Cera. Cap.
   0.1(≠): 0.1μF 16V N (FZ005060) 1pc.
2. Coil
   (≠): SBT-0260TF 60μH (VF968800) 3pcs
3. Phone Jack
   HP: YKB21-5008 BL (VB891100) HEADPHONES

Circuit Board: MVR (VK646300) XI981O0 3/3

1. IC
   IC 1: RC4558DV (IG001390) OP AMP.
2. Variable Resistor
   VR 1,2: A10K×3 MASTER VOLUME
3. EMI Filter
   NF 1,2: DSS306-93F223Z1 22000p (VD542700)

Circuit Board: AUX (VK749500) XJ088C0

1. IC
   IC 1: RC4558DV (IG001390) OP AMP.
2. Transistor
   Q 1~3: 2SA1298 Y,GR (VK806700)
3. Metal Film Resistor
   R 1: 2.2Ω 3W J (VL060200)
   R 2: 3.3Ω 3W J (VL060300)
   R 3: 4.7Ω 3W J (VL060400)
4. Semiconductive Cera. Cap.
   0.1(≠): 0.1μF 16V N (FZ005060) 3pcs
5. Coil
   (≠): SBT-0260TF 60μH (VF968800) 6pcs
6. LC Filter
   (LC): DSS306-93F223Z1 22000p (VD542700) 2pcs
7. Slide Switch: SSSF14 (VH101900) LCD BRIGHTNESS
8. Pin Jack
   AUX IN/OUTIL/R): YKC21-0476 (VJ885400) AUX IN/OUTIL/R)

Circuit Board: FU XJ55880 (U,C only)

1. Fuse
   F703: 6.0A 250V (KB001250)
   F704,705: 7.0A 125V (KB001520)

Circuit Board: PU XJ545A0

1. IC
   IC501: SI-3050C (XI164A00) 5V REGULATOR
   IC502: M5237L (XI165A00) REGULATOR
   IC503: NJM7815FA (KD853A00) 15V REGULATOR
   IC504: NJM7915FA (KD854A00) 15V REGULATOR
   IC505,508,511: NJM4558S (IG078500) OP AMP.
   IC506,507: M5227P (KF751A00) EQUALIZER
   IC512,514: STK4192-2 (XI162A00) 50W 2CH P.AMP
2. Transistor
   T401: 2SA1451 O,Y (VJ828100)
   T402~406: 2SC1815 GR (VJ926400)
3. Diode
   D303~317: 11ES4 (VB481900)
4. Diode Bridge
   D301,302: RBV-602 6A 200V (VL834300)
5. Zener Diode
   D318: MTZ24B 24V (VB407600)
6. Metal Oxide Film Resistor
   R159,169,194,205: 3.3KΩ 1W J (VC748800)
   R161,162,195,197: 470Ω 1W J (VC747400)
   R163,170,199,206: 150Ω 1W J (VC742500)
   R211,208: 3900Ω 2W J (VC760200)
   R211,212,239: 2200Ω 2W J (VC759500)
   R238: 560Ω 1W J (VC746800)
7. Fuse Resistor
   R101: 3.3Ω 1W J (VJ828900)
   R156,198: 100Ω 1/4 J (RW095100)
   R223,224: 0.47Ω 1W J (VL130300)
   (U,U,C,D,B,A,X,M): Jumper Wire
   (H): R227 (U,C): 0.47Ω 1W J (VL130300)
   (others): Jumper Wire
8. Electrolytic Cap.
   C212~214: 6800μF 10V (UL232100)
   C215,216: 220μF 10V (UJ828220)
   C223,224: 2200μF 25V (VL232300)
   C230~233: 3300μF 50V (VL232200)
   C271,329: 1000μF 6.3V (UJ819100)
9. Ceramic Cap.
   C222,225: 0.01μF 500V P (VA302600)
10. Semiconductive Cera. Cap.
    C292,293,297,298 318,319,323,324: 0.1μF 25V Z (VC694800)
11. Relay
    RY 1,3,4: DC DH24D2-DT(M) 24V (KC001940)
12. Fuse
    F703 (H): T 6.3A S 250V (KB001890)
    (others): Jumper Wire
13. Connector Assembly
    BW1-BW1,BW2-BW2: SCN-SCN 6P L=100mm

YAMAHA Electone®

EL-70

PARTS LIST

■ CONTENTS（目次）

ELECTRICAL PARTS（電気部品）…… 1
POWER AMPLIFIER（電源アンプ）…… 6
OVERALL ASSEMBLY（総組立）…… 7
UPPER UNIT（上部ユニット）…… 9
PANEL ASSEMBLY（パネルアセンブリー）……10
CENTER PANEL UNIT（センターパネルユニット）……12
LEFT PANEL UNIT（レフトパネルユニット）……14
RIGHT PANEL UNIT（ライトパネルユニット）……15
SWITCH ESCUTCHEON Ass'y (A)（スイッチ枠Ass'y(A)） 16
SWITCH ESCUTCHEON Ass'y (B)（スイッチ枠Ass'y(B)） 18
SWITCH ESCUTCHEON Ass'y (D)（スイッチ枠Ass'y(D)） 19
SWITCH ESCUTCHEON Ass'y (E)/(F)
（スイッチ枠Ass'y (E)/(F)）……20
KEYBOARD ASSEMBLY (UK, LK)
（FS鍵盤Ass'y (UK, LK)）……21
PANEL CASE UNIT（パネルケースユニット）……22
ARM UNIT (LEFT/RIGHT)（腕木ユニット(左/右)）……25
KNEE LEVER UNIT（ニーレバーユニット）……27
PEDAL UNIT（ペダルユニット）……28
EXPRESSION PEDAL（EXPペダル）……30
SPEAKER BOX UNIT（スピーカーボックスユニット）……32
BENCH（椅子）……33

Note) DESTINATION ABBREVIATIONS

J : Japanese model	A : Australian model
U : U.S. model	E : European model
C : Canadian model	D : German model
X : General model	B : British model
M : South African model	I : Indonesian model
H : North European model	

■ELECTRICAL PARTS（電気部品）

	Ref. No.	Part No.	Description		部品名	Remarks	ランク
*		VL546600	Circuit Board	DM	DMシート	J S/#1001～	89
*		VL861700	Circuit Board	DM(4)	DMシート	J (EL-70)	
*		VK836800	Circuit Board	DM(4)	DMシート	U,C,H,D,B,A,X,M	89
*		VK748800	Circuit Board	ANG	ANGシート		18
*		VK803700	Circuit Board	ROM1	ROM1シート	J S/#1001～	51
*		VK837100	Circuit Board	ROM1(4)	ROM1シート		52
*		VK644800	Circuit Board	PN1	PN1シート		23
*		VK645200	Circuit Board	PN2	PN2シート		14
*		VK644900	Circuit Board	PN3	PN3シート		08
*		VK645000	Circuit Board	PN4	PN4シート		19
*		VK645100	Circuit board	CP1	CP1シート		09
*		VK645400	Circuit Board	CP2	CP2シート		29
*		VK646100	Circuit Board	CP3	CP3シート		20
*		VK646200	Circuit Board	CP4	CP4シート		21
*		VJ661500	Circuit Board	PS1	PS1シート		14
*		VJ661600	Circuit Board	PS2	PS2シート		14
*		VK749700	Circuit Board	LCD	LCDシート		13
*		VK748400	Circuit Board	MDR	MDRシート	J S/#1001～	36
*		VK837500	Circuit Board	MDR(4)	MDRシート		38
*		VK646300	Circuit Board	MVR	MVRシート		10
*		VK836400	Circuit Board	MIDI	MIDIシート		07
*		VK749500	Circuit board	AUX	AUXシート		10
*		VJ660100	Circuit Board	HP	HPシート		13
*		VK803800	Circuit Board	RA	RAシート		09
*		VK749000	Circuit Board	MK	MKシート		15
*		VK806400	Circuit Board	PKH	PKHシート	J	12
*		VJ661000	Circuit Board	PKH	PKHシート	U,C,H,D,B,A,X,M	07
*		VK806200	Circuit Board	PKL	PKLシート	J	14
*		VJ660800	Circuit Board	PKL	PKLシート	U,C,H,D,B,A,X,M	09
*		VJ636200	Circuit Board	PRM	PRMシート	J	10
*		VJ636300	Circuit Board	PRM	PRMシート	U,C	11
*		VJ636400	Circuit Board	PRM	PRMシート	D,H,B,A	11
*		VJ636500	Circuit Board	PRM	PRMシート	X,M	11
*		VJ965100	Circuit Board	EXP	EXPシート	2CH	07
*		VJ695800	Circuit Board	KNELEV	KNELEVシート		02
*		VL546600	Circuit Board	DM	DMシート	J S/#1001～	89
*		VL861700	Circuit Board	DM(4)	DMシート	J	
*		VK836800	Circuit Board	DM(4)	DMシート	U,C,H,D,B,A,X,M	89
		IG103520	IC	NJM4558MT-1	IC	OP AMP.	03
		XA862B00	IC	NJM4560M(T1)	IC	OP AMP.	02
		IG079500	IC	T6400(S)	IC	DRIVER	05
*		XC725A00	IC	SN74HC14NSR	IC	INVERTER	03
*		XC726A00	IC	SN74HC74NSR	IC	D.FF	01
		XD830A00	IC	SN74HC04NSR	IC	INVERTER	01
		XD831A00	IC	SN74HC08NSR	IC	AND	01
		XD833A00	IC	SN74HC32NSR	IC	OR	01
		XD835A00	IC	SN74HC138NSR	IC	DECODER	02
		XD836A00	IC	SN74HC174NSR	IC	D.FF	02
*		XG387A00	IC	SN74HC373NSR	IC	D.LATCH	03
*		XI299A00	IC	TC74HC4050AF-T1	IC	BUFFER	02
*		XI307A00	IC	SN74AC11011NSR	IC	AND	03
*		XI313A00	IC	SN74AS04NSR	IC	INVERTER	03
*		XI314A00	IC	SN74AS32NSR	IC	OR	03
*		XI316A00	IC	SN74LS03NSR	IC	NAND	01
*		XI974A00	IC	74AC11074NS-R	IC	D.FF	04
*		XB529A00	IC	HD63C03YP	IC	MPU	10
*		XB809A00	IC	TC17G005AN-0023	IC	MI-1	05
		XG662A00	IC	TMC57800N	IC	MIX5	07
*		XI286A00	IC	M37700SAFP	IC	CPU	10
*		XI021A00	IC	TC51832FL-10	IC	PSRAM 256K	08
*		XJ122A00	IC	TC5565AFL-10	IC	SRAM 64K	08
*		XJ811B00	IC		IC	MASKROM MAIN	
*		XJ127C00	IC		IC	MASKROM BANK	
*		XJ129F00	IC	HN62331PC17	IC	M.ROM SLAVE 1,2	
*		XJ130D00	IC		IC	MASKROM SLAVE 3	
*		XJ162C00	IC	HN62314BPE33	IC	MASKROM RHY-L	14
*		XJ163C00	IC	HN62314BPE34	IC	MASKROM RHY-H	14
		XA804A00	IC	YM2406	IC	DFL	10
		XE449A00	IC	YM3413	IC	LDSP	10
		XE789A00	IC	YM3028	IC	DAL2	10
		XH235B00	IC	YM7132	IC	OPWZ	16
		XH236A00	IC	YM7131	IC	OPLZ	16
*		XH238A00	IC	YM3440	IC	LEF2	12
*		XI976A00	IC	YSF207	IC	DCF1	21
		XF981A00	IC	M5M4464AP-10	IC	DRAM 256K	08
		XH688A00	IC	μPD43256AGU-10	IC	SRAM 1M	13
*		VJ927500	Photo Coupler	PC-400Z	フォトカプラ		04
		VJ927200	Transistor	2SA1162 O,Y	トランジスタ		01

*New Parts（新規部品）

ランク：Japan only

	Ref. No.	Part No.	Description		部品名	Remarks	ランク
*		VJ927100	Transistor	2SC2712 Y	トランジスタ		01
		VB797600	Diode	RLS-73	ダイオード		01
*		VL076300	Diode Array	DA204U 2.0A×2	ダイオードアレイ		01
*		VI993500	Zener Diode	MTZ5.6B 5.6V	ツェナーダイオード		01
		VF771900	Resistor Array	RGLE8X103J	抵抗アレイ	10K×8	01
		VF773500	Resistor Array	RGLE4X103J	抵抗アレイ	10K×4	01
		UJ818220	Electrolytic Cap.	220μF 6.3V	ケミコン		
		UJ818470	Electrolytic Cap.	470μF 6.3V	ケミコン		01
		UJ838220	Electrolytic Cap.	220μF 16V	ケミコン		01
		VH604600	Gold Cap.	1.0F 5.5V	ゴールドキャパシタ		06
		VH484100	Ceramic Cap. Array	100pF×8 50V M	セラコンアレイ		02
*		VJ944300	Ceramic Cap. Array	220pF×8 50V M	セラコンアレイ		01
*		VJ928500	Chip Inductor	BLM32A06	チップインダクタ		01
		VD542700	LC Filter	DSS306-93F223Z1	LCフィルター	22000P	01
*		VL097700	Ceramic Resonator	12.0MHz	セラミック振動子		02
		VE463500	Quartz Crystal Unit	AT-49/12.0MHz	水晶振動子		03
*		VK634300	Quartz Crystal Unit	25.6MHz DOC-492	水晶振動子		07
		--	Adhesive Tape	570F 30M W=10	粘着テープ		
*		VK748800	Circuit Board	ANG	ANGシート		18
		IG001390	IC	RC4558DV	IC	OP AMP.	03
*		XI315A00	IC	M5283P	IC	VCA	06
*		IC1815M0	Transistor	2SC1815 Y,GR	トランジスタ		01
		VB481900	Diode	11ES4	ダイオード		01
		IF003450	Diode	1SS133	ダイオード		01
*		VA095900	Zener Diode	MTZ10B 10V	ツェナーダイオード		01
		VI637400	Fuse Resistor	10Ω 1W J	ヒューズ抵抗		01
*		VL522200	Trimmer Potentiometer	B50K 3P EVN	半固定ボリューム		
		UJ838220	Electrolytic Cap.	220μF 16V	ケミコン		01
		UJ838470	Electrolytic Cap.	470μF 16V	ケミコン		01
		VF173700	Electrolytic Cap.	2200μF 16V	ケミコン		02
		FZ005060	Semiconductive Cera. Cap.	0.1μF 16V N	半導体セラコン		01
*		VL122400	Ceramic Cap. Array	1000pF×8 50V M	セラコンアレイ		02
		VD542700	LC Filter	DSS306-93F223Z1	LCフィルター	22000p	01
		VB996300	Relay	DC G5A-237P	リレー		05
		VA078900	Jumper Wire	0.55	ジャンパー線		
*		VK803700	Circuit Board	ROM1	ROM1シート	J S/#1001～	51
*		VK837100	Circuit Board	ROM1(4)	ROM1シート		52
*		XC727A00	IC	SN74HC139NSR	IC	DECODER	02
*		XI311A00	IC	SN74AC11244NSE	IC	BUS BUFFER	06
*		XJ164C00	IC	HN62408PD61	IC	MASKROM AWM1 8M	16
*		XJ165C00	IC	HN62408PD62	IC	MASKROM AWM2 8M	16
*		XJ166C00	IC	HN62408PD63	IC	MASKROM AWM3 8M	16
*		XJ167C00	IC	LH53802L	IC	MASKROM AWM4 8M	16
*		XJ168C00	IC	LH53802S	IC	MASKROM AWM5 8M	16
*		XJ169C00	IC	LH53802Y	IC	MASKROM AWM6 8M	16
*		XJ170C00	IC	UPD23C8000CZ068	IC	MASKROM AWM7 8M	16
*		XJ171C00	IC	UPD23C8000CZ069	IC	MASKROM AWM8 8M	16
*		VK644800	Circuit Board	PN1	PN1シート		23
*		XH997A00	IC	PLD-100 BX7882W	IC	LED DRIVER	
*		XH999A00	IC	PLD-17 BX7884W	IC	LAMP DRIVER	
		--	Diode	HSM2836C	ダイオード		
		VJ979600	Chip LED	CL-150SD-CD	チップLED	RE	
		--	Coil	SN3-205 10μH	コイル		
*		VK804700	Rubber Contact	1×1 Keys BE	ラバースイッチ	4pcs FILL IN	
*		VK806900	Rubber Contact	2×1 Keys BE	ラバースイッチ	1pc. KEY.PER.	
*		VK807200	Rubber Contact	2×8 Keys BE	ラバースイッチ	1pc. RHYTHM	
*		VK804900	Rubber Contact	7 Keys GY	ラバースイッチ	1pc. MAX/MIN	
*		VK645200	Circuit Board	PN2	PN2シート		14
		IF003450	Diode	1SS133	ダイオード		01
*		VL387200	LED	SLZ-989C-03 RE	LED		01
		VC844200	Rotaly Encoder	EC24BG5D	ロータリーエンコーダ	TEMPO	08
		VC999500	LED Display	SL-9284-22	LEDディスプレイ	TEMPO,BAR/BEAT	07
		--	Connector Assembly	8P-150	DS-KR束線	PN2_CN2-PN1_CN7	
		--	Connector Assembly	10P-70	DS-KR束線	PN2_CN1-PN1_CN6	
*		VK644900	Circuit Board	PN3	PN3シート		08
		--	Diode	HSM2836C	ダイオード		
		VJ979600	Chip LED	CL-150SD-CD	チップLED	RE	
*		VK804700	Rubber Contact	1×1 Keys BE	ラバースイッチ	1pc. BASIC REG.	
*		VK806900	Rubber Contact	2×1 Keys BE	ラバースイッチ	2pcs BASIC REG.	
*		VK645000	Circuit Board	PN4	PN4シート		19
*		XH998A00	IC	PLD-72 BX7883W	IC	LED DRIVER	
		--	Diode	HSM2836C	ダイオード		
		--	Diode	HRP100	ダイオード		

*New Parts (新規部品)

ランク：Japan only

	Ref. No.	Part No.	Description		部品名	Remarks	ランク
		VJ979600	Chip LED	CL-150SD-CD	チップＬＥＤ	RE	
		--	Chip LED	CL-155SD/PG-CD	チップＬＥＤ	RE/GR	
		--	Coil	SN3-205 10μH	コイル		
*		VK805400	Rubber Contact	9 Keys BE	ラバースイッチ	1pc. REG/PLAY	
*		VK805500	Rubber Contact	7 Keys GY	ラバースイッチ	1pc. MUSIC D.R.	
*		VK000900	LED Display	LC-204VL7 7seg.	ＬＥＤディスプレイ	SONG SELECT	07
*		VK645100	Circuit Board	CP1	ＣＰ１シート		09
		--	Diode	HSM2836C	ダイオード		
		VJ979600	Chip LED	CL-150SD-CD	チップＬＥＤ	RE	
*		VK804700	Rubber Contact	1×1 Keys BE	ラバースイッチ	1pc. SUSTAIN	
*		VK806900	Rubber Contact	2×1 Keys BE	ラバースイッチ	1pc. SUSTAIN	
*		VK804900	Rubber Contact	7 Keys GY	ラバースイッチ	1pc. REVERB	
*		VK645400	Circuit Board	CP2	ＣＰ２シート		29
*		XH998A00	IC	PLD-72 BX7883W	ＩＣ	LED DRIVER	
		--	Diode	HSM2836C	ダイオード		
		VJ979600	Chip LED	CL-150SD-CD	チップＬＥＤ	RE	
			Coil	SN3-205 10μH	コイル		
*		VK807100	Rubber Contact	2×7 Keys BE	ラバースイッチ	4pcs VOICE 1 2	
*		VK804900	Rubber Contact	7 Keys GY	ラバースイッチ	8pcs BRI./MEL.	
*		VK646100	Circuit Board	CP3	ＣＰ３シート		20
		--	Diode	HSM2836C	ダイオード		
		VJ979600	Chip LED	CL-150SD-CD	チップＬＥＤ	RE	
*		VK805200	Rubber Contact	18 Keys BE	ラバースイッチ	1pc. DATA CON.	
*		VK805700	Rubber Contact	15 Keys BE	ラバースイッチ	1pc. DISPLAY S.	
*		VK805800	Rubber Contact	1 Keys BE	ラバースイッチ	2pcs	
*		VK646200	Circuit Board	CP4	ＣＰ４シート		21
*		XH997A00	IC	PLD-100 BX7882W	ＩＣ	LED DRIVER	
		--	Diode	HSM2836C	ダイオード		
		VJ979600	Chip LED	CL-150SD-CD	チップＬＥＤ	RE	
		--	Coil	SN3-205 10μH	コイル		
*		VL439600	Ceramic Cap. Array	EXF-P6680MF	セラコンアレイ		
*		VK807000	Rubber Contact	2×3 Keys BE	ラバースイッチ	2pcs L/P VOICE	
*		VK804900	Rubber Contact	7 Keys GY	ラバースイッチ	4pcs MAX/MIN	
*		VJ661500	Circuit Board	PS1	ＰＳ１シート		14
		VA240700	Diode	1SS176	ダイオード		01
		VF731200	Push Switch	15AL	照光プッシュスイッチ	1	05
		VF731300	Push Switch	15AL	照光プッシュスイッチ	2	05
		VF731400	Push Switch	15AL	照光プッシュスイッチ	3	05
		VF731500	Push Switch	15AL	照光プッシュスイッチ	4	05
*		VL127300	Push Switch	15AL	照光プッシュスイッチ	M./TO DISK	05
*		JX000070	Lamp	AF12007201	ランプ	12V 35mA φ0.25	
*		VJ661600	Circuit Board	PS2	ＰＳ２シート		14
		VA240700	Diode	1SS176	ダイオード		01
		VF731600	Push Switch	15AL	照光プッシュスイッチ	5	05
		VF731700	Push Switch	15AL	照光プッシュスイッチ	6	05
		VF731800	Push Switch	15AL	照光プッシュスイッチ	7	05
		VF731900	Push Switch	15AL	照光プッシュスイッチ	8	05
		VF732900	Push Switch	15AL	照光プッシュスイッチ	D	05
*		JX000070	Lamp	AF12007201	ランプ	12V 35mA φ0.25	
*		VK749700	Circuit Board	LCD	ＬＣＤシート		13
		IG103520	IC	NJM4558MT-1	ＩＣ	OP AMP.	03
*		XJ120A00	IC	TC4050BF(TP1)	ＩＣ	BUFFER	01
		VJ927200	Transistor	2SA1162 O,Y	トランジスタ		01
*		VJ927100	Transistor	2SC2712 Y	トランジスタ		01
		VB797600	Diode	RLS-73	ダイオード		01
*		VK775000	Positive Thermistor	PTH60T222M 2.2K	ポジスタ		05
*		VL521900	Trimmer Potentiometer	B10K 3P EVN	半固定ボリューム		
		UJ838220	Electrolytic Cap.	220μF 16V	ケミコン		01
*		VK748400	Circuit Board	MDR	ＭＤＲシート	J S/#1001～	36
*		VK837500	Circuit Board	MDR(4)	ＭＤＲシート		38
		XD835A00	IC	SN74HC138NSR	ＩＣ	DECODER	02
		XE052A00	IC	TC74HC393AF-TP1	ＩＣ	BINARY COUNTER	03
		XH218A00	IC	SN74HC125NSR	ＩＣ	BUS BUFFER	02
*		XI296A00	IC	TC74HCT373AF-T1	ＩＣ	D.LATCH	03
*		XI297A00	IC	TC74HCT04AF-T1	ＩＣ	INVERTER	01
*		XI308A00	IC	SN74AC11000NSR	ＩＣ	NAND	03
*		XI309A00	IC	SN74AC11032NSR	ＩＣ	OR	03
*		XI310A00	IC	SN74AC11008NSR	ＩＣ	AND	03
*		XI312A00	IC	SN74AC11138NSR	ＩＣ	DECODER	05

*New Parts（新規部品）

ランク：Japan only

	Ref. No.	Part No.	Description		部品名	Remarks	ランク
*		XB529A00	IC	HD63C03YP	I C	MPU	10
		XE451A00	IC	TMP82C54M-2	I C	TIMER/COUNTER	06
*		XE909C00	IC	WD37C65C	I C	FDD CONTROL	12
*		XI294A00	IC	TMP82C37AM-5	I C	DMA	08
		XH688A00	IC	μPD43256AGU-10	I C	SRAM 1M	13
*		XJ161G00	IC		I C	MASKROM MDR 1M	
		VF771900	Resistor Array	RGLE8X103J	抵抗アレイ	10K×8	01
		VF773500	Resistor Array	RGLE4X103J	抵抗アレイ	10K×4	01
*		VL078100	Resistor Array	RGLE4X151J	抵抗アレイ	150×4	01
		VD542700	LC Filter	DSS306-93F223Z1	L C フィルター	22000p	01
		QU007700	Ceramic Resonator	12.0MHz	セラミック振動子		03
		VI927400	Quartz Crystal Unit	16.0MHz DOC-492	水晶発振器		07
*		VJ928500	Chip Inductor	BLM32A06	チップインダクタ		01
*		VK646300	Circuit Board	MVR	M V R シート		10
		IG001390	IC	RC4558DV	I C	OP AMP	03
		--	Variable Resistor	A10K×3	3連ﾛｰﾀﾘｰﾎﾞﾘｭｰﾑ	MASTER VOLUME	
		VD542700	EMI Filter	DSS306-93F223Z1	L C フィルター	22000p	01
*		VK836400	Circuit Board	MIDI	M I D I シート		07
		VF968800	Coil	SBT-0260TF 60μ	コイル		01
*		VJ885500	DIN Jack	3P YKF51-5054	D I N ジャック	MIDI IN/OUT	04
*		VK749500	Circuit Board	AUX	A U X シート		10
		IG001390	IC	RC4558DV	I C	OP AMP.	03
*		VK806700	Transistor	2SA1296 Y,GR	トランジスタ		02
*		VL060200	Metal Film Resistor	2.2Ω 3W J	金属皮膜抵抗		01
*		VL060300	Metal Film Resistor	3.3Ω 3W J	金属皮膜抵抗		01
*		VL060400	Metal Film Resistor	4.7Ω 3W J	金属皮膜抵抗		01
		FZ005060	Semiconductive Cera. Cap.	0.1μF 16V N	半導体セラコン		01
		VF968800	Coil	SBT-0260TF 60μ	コイル		01
		VD542700	LC Filter	DSS306-93F223Z1	L C フィルター	22000p	01
		VH101900	Slide Switch	SSSF14	スライドスイッチ	LCD BRIGHTNESS	03
*		VJ885400	Pin Jack	YKC21-0476	ピンジャック	AUX IN/OUT(L/R)	02
*		VK856400	Holder		受金具		03
		VA078900	Jumper Wire	0.55	ジャンパー線		
		--	Earth Wire	L=150	アース線		
*		VJ660100	Circuit Board	HP	H P シート		13
		FZ005060	Semiconductive Cera. Cap.	0.1μF 16V N	半導体セラコン		01
		VF968800	Coil	SBT-0260TF 60μ	コイル		01
		VB891100	Phone Jack	YKB21-5008 BL	ホーンジャック	HEADPHONES	03
*		VK803800	Circuit Board	RA	R A シート		09
		IG001390	IC	RC4558DV	I C	OP AMP.	03
		FZ005060	Semiconductive Cera. Cap.	0.1μF 16V N	半導体セラコン		01
		VF968800	Coil	SBT-0260TF 60μ	コイル		01
		FZ005920	EMI Filter	LS MT Y223NB	L C フィルター E M I	22000p	02
		VC687500	Phone Jack	YKB21-5014 BL	ホーンジャック	RHY-IN L	01
		VD376100	Phone Jack	YKB21-5154 GY	ホーンジャック	RHY-IN R	01
*		VK749000	Circuit Board	MK	M K シート		15
		IG042500	IC	NJM4556	I C	OP AMP.	04
		IG001740	IC	TC4050BP	I C	BUFFER	03
		XA805001	IC	YM3603	I C	KBS1	09
		IF003450	Diode	1SS133	ダイオード		01
		VA093900	Zener Diode	MTZ5.1B 5.1V	ツェナーダイオード		01
		VB433900	Resistor Array	RMLS8 J 333	抵抗アレイ	33K×8	01
		HT190070	Trimmer Potentiometer	B50K 3P EVL	半固定ボリューム		02
		HT190080	Trimmer Potentiometer	B100K 3P EVL	半固定ボリューム		02
		VI307100	Monolithic Cera. Cap.	0.1μF 50V Z	積層セラコン		01
		VB935500	Ceramic Cap. Array	1000pF×7 50V Z	セラコンアレイ		01
		VD542700	LC Filter	DSS306-93F223Z1	L C フィルター	22000p	01
		VB467100	Ceramic Resonator	3.25MHz	セラミック振動子		02
		VA078900	Jumper Wire	0.55	ジャンパー線		
*		VK806400	Circuit Board	PKH	P K H シート	J	12
		IG001390	IC	RC4558DV	I C	OP AMP.	03
		IF003450	Diode	1SS133	ダイオード		01
		VA093900	Zener Diode	MTZ5.1B 5.1V	ツェナーダイオード		01
*		VA293500	Metal Film Resistor	10KΩ 1/4 B	金属皮膜抵抗		01
		HT370250	Trimmer Potentiometer	B50K 3P EVN	半固定ボリューム	1,3	02
		HT370270	Trimmer Potentiometer	B200K 3P EVN	半固定ボリューム	2,4	02
		VI307100	Monolithic Cera. Cap.	0.1μF 50V Z	積層セラコン		01
		VA078900	Jumper Wire	0.55	ジャンパー線		
*		VJ661000	Circuit Board	PKH	P K H シート	U,C,D,H,B,A,X,M	07
*		VK806200	Circuit Board	PKL	P K L シート	J	14

*New Parts (新規部品)

ランク：Japan only

	Ref. No.	Part No.	Description		部品名	Remarks	ランク
		IG001740	IC	TC4050BP	IC	BUFFER	03
		XA805001	IC	YM3603	IC	KBS1	09
		IF003450	Diode	1SS133	ダイオード		01
*		VL217400	Resistor Array	RGLD5X153J	抵抗アレイ	15K×5	01
		VI307100	Monolithic Cera. Cap.	0.1μF 50V Z	積層セラコン		01
		VB935500	Ceramic Cap Array	1000pF×7 50V Z	セラコンアレイ		01
		FZ005920	EMI Filter	LS MT Y223NB	LCフィルターEMI		02
		VB467100	Ceramic Resonator	3.25MHz	セラミック振動子		02
		VF968800	Coil	SBT-0260TF 60μ	コイル		01
		VA078900	Jumper Wire	0.55	ジャンパー線		
*		VJ660800	Circuit Board	PKL	PKLシート	U,C,D,H,B,A,X,M	09
		IF003450	Diode	1SS133	ダイオード		01
*		VJ636200	Circuit Board	PRM	PRMシート	J	10
* *		VJ636300	Circuit Board	PRM	PRMシート	U,C	11
* *		VJ636400	Circuit Board	PRM	PRMシート	D,H,B,A	11
*		VJ636500	Circuit Board	PRM	PRMシート	X,M	11
		VA302800	Ceramic Cap	0.01μF 125V	セラコン		01
*		VJ898300	Coil	SC-05-10J	コイル	1mH 5A	06
* *		VK315900	Coil	TF2528S-102Y5R0	コイル	1mH 5A	06
* *		VJ898200	Coil	SN10-500J	コイル	110μH 5A	04
*		VK900000	Coil	SF1-T10-50-01	コイル	110μH 5A	
		KB001280	Fuse	6.0A 250V	ヒューズ	J,X,M	02
		KB001250	Fuse	6.0A 250V	ヒューズ	U,C	02
		KB000690	Fuse	T 2.5A S 250V	ヒューズ	D,H,B,A,X,M	02
		LB201530	Fuse Holder	PC-FH1	ヒューズホルダ	2pcs (X,M:4pcs)	01
		VA078900	Jumper Wire	0.55	ジャンパー線		
*		VJ965100	Circuit Board	EXP	EXPシート	2CH	07
		VA228800	Variable Resistor	B10K RK16Y11L	ロータリーボリューム		05
*		XI082A00	Power Transformer		電源トランス	J	18
* *		XI155A00	Power Transformer		電源トランス	D,H,B,A	18
* *		XI154C00	Power Transformer		電源トランス	U,C	
*		XI156A00	Power Transformer		電源トランス	X,M	18
*		VK652700	AC Cord	2P 7A 3.75m	電源コード	J	06
* *		VK652900	AC Cord	2P 6A 3.75m	電源コード	D,H	06
* *		VK653100	AC Cord	2P 6A 3.75m	電源コード	A	06
* *		VK652800	AC Cord	UC-705-J04	電源コード	U,C	08
* *		VJ959800	AC Cord	2P 6A 3.75m	電源コード	M	
* *		VK653000	AC Cord	2P 6A 3.75m	電源コード	X	05
*		VJ959900	AC Cord	2P 6A 3.75m	電源コード	B	08
*		XJ227A00	Speaker	JA2130	スピーカー	Woofer	21
*		XI168A00	Speaker	2.5CM 8Ω 60W	スピーカー	Tweeter	
*		XI169B00	Speaker	12×5cm 16Ω	スピーカー	Monitor	08
*		VJ437000	Floppy Disk Drive	1M/2M BL 3.5"	FDD		31
*		VK862000	LCD	DMF5018NY-LY2	液晶ディスプレイ		33
		VC843500	Push Switch	SDDLB1	プッシュスイッチ	POWER	03
		VA228500	Micro Switch	SPPB13001A	マイクロスイッチ	EXP	01

*New Parts（新規部品）

ランク：Japan only

■POWER AMPLIFIER（電源アンプ）

Ref. No.	Part No.	Description		部品名	Remarks	ランク
*	VJ964000	Power Amplifier Unit		電源アンプ	J,D,B,A,X,M	34
**	VJ961200	Power Amplifier Unit		電源アンプ	H (EL-70)	34
**	VK965800	Power Amplifier Unit		電源アンプ	C	34
**	VJ963900	Power Amplifier Unit		電源アンプ	U	34
*	VL504300	FU Unit		FUユニット	U,C only	18
		< Power Amplifier Unit >		<電源アンプ>		
	--	Chassis		電源シャーシ		
	--	Heat Sink		放熱器		
	AA058660	Holder, Transistor		トランジスターホルダ	STK4152-2	01
	VH605100	Holder, PT		PTホルダー	RBV-602/2SA1451	01
	--	Circuit Board	PU	PUシート		
*	EP600070	Bind Head Screw	3.0X8 ZMC2Y	+バインドSタイト	9pcs	01
	ED030126	Bind Head Screw	3.0X12 ZMC2Y	+バインド小ネジ	3pcs	01
	ED030166	Bind Head Screw	3.0X16 ZMC2Y	+バインド小ネジ	6pcs	01
	--	Adhesive Tape	570F 30M W=10	粘着テープ		
	--	Angle		アングル	U only (2pcs)	
	ED030066	Bind Head Screw	3.0X6 ZMC2Y	+バインドSタイト	U only (2pcs)	01
	--	Circuit Board	PU	PUシート		
	IG076800	IC	NJM4558S	IC	OP AMP.	03
*	XI162A00	IC	STK4192-2	IC	50W 2CH P.AMP	09
	XD853A00	IC	NJM7815FA	IC	15V REGULATOR	03
	XD854A00	IC	NJM7915FA	IC	15V REGULATOR	03
**	XI164A00	IC	SI-3050C	IC	5V REGULATOR	
**	XI165A00	IC	M5237L	IC	REGULATOR	02
	XF751A00	IC	M5227P	IC	EQUALIZER	04
**	VJ828100	Transistor	2SA1451 O.Y	トランジスタ		04
**	VJ926400	Transistor	2SC1815 (GR)	トランジスタ		
	VB481900	Diode	11ES4	ダイオード		01
	VI234100	Diode Bridge	RBV-602 6A 200V	ダイオードブリッジ		03
*	VB407600	Zener Diode	MTZ24B 24V	ツェナーダイオード		01
	VC742500	Metal Oxide Film Resistor	10Ω 1W J	酸化金属皮膜抵抗		01
*	VC746800	Metal Oxide Film Resistor	560Ω 1W J	酸化金属皮膜抵抗		01
	VC759500	Metal Oxide Film Resistor	220Ω 2W J	酸化金属皮膜抵抗		01
**	VC760200	Metal Oxide Film Resistor	390Ω 2W J	酸化金属皮膜抵抗		01
**	VC747400	Metal Oxide Film Resistor	1KΩ 1W J	酸化金属皮膜抵抗		01
	VC748800	Metal Oxide Film Resistor	3.3KΩ 1W J	酸化金属皮膜抵抗		01
	HW095100	Fuse Resistor	100Ω 1/4 J	ヒューズ抵抗		01
*	VJ828900	Fuse Resistor	3.3Ω 1W J	ヒューズ抵抗		01
*	VL130300	Fuse Resistor	0.47Ω 1W J	ヒューズ抵抗	J,U,C,D,B,A,X,M	01
	UJ828220	Electrolytic Cap.	220μF 10V	ケミコン		01
	UJ819100	Electrolytic Cap.	1000μF 6.3V	ケミコン		01
*	VL232100	Electrolytic Cap.	6800μF 10V	ケミコン		03
***	VL232200	Electrolytic Cap.	3300μF 50V	ケミコン		04
*	VL232300	Electrolytic Cap.	2200μF 25V	ケミコン		03
	VA302600	Ceramic Cap.	0.01μF 500V P	セラコン		01
	VC694800	Semiconductive Cera. Cap.	0.1μF 25V Z	半導体セラコン		01
	KC001940	Relay	DC DH24D2-0T(M)	リレー	24V	05
	KB001890	Fuse	T 6.3A S 250V	ヒューズ	H only	02
	VA078900	Jumper Wire	0.55	ジャンパー線		
	ED030086	Bind Head Screw	3.0X8 ZMC2Y	+バインド小ネジ	6pcs	01
	LB201530	Fuse Holder	PC-FH1	ヒューズホルダ	H only (2pcs)	01
	--	Heat Sink		放熱器		
	--	Sheet		放熱シート	Power	
	--	Sheet		放熱シート	Regulator	
	--	Connector Assembly	6P-100	SCN－SCN束線	BW1,BW2	
*	VL504300	<FU Unit>		<FUユニット>	U,C only	18
	--	Chassis, FU		FUシャーシ		
	--	Insulation Sheet	NF-77	絶縁紙		
	--	Circuit Board	FU	FUシート	U,C only	
	--	Connector Assembly	8P	VH－VH束線	FU_CN22-PU_CN11	
	ED030066	Bind Head Screw	3.0X6 ZMC2Y	+バインドSタイト	4pcs	01
	--	Circuit Board	FU	FUシート	U,C only	
	KB001250	Fuse	6.0A 250V	ヒューズ	1pc.	02
	KB001520	Fuse	7.0A 125V	ヒューズ	2pcs	02
	LB201530	Fuse Holder	PC-FH1	ヒューズホルダ		01

*New Parts（新規部品）

ランク：Japan only

■ OVERALL ASSEMBLY（総組立）

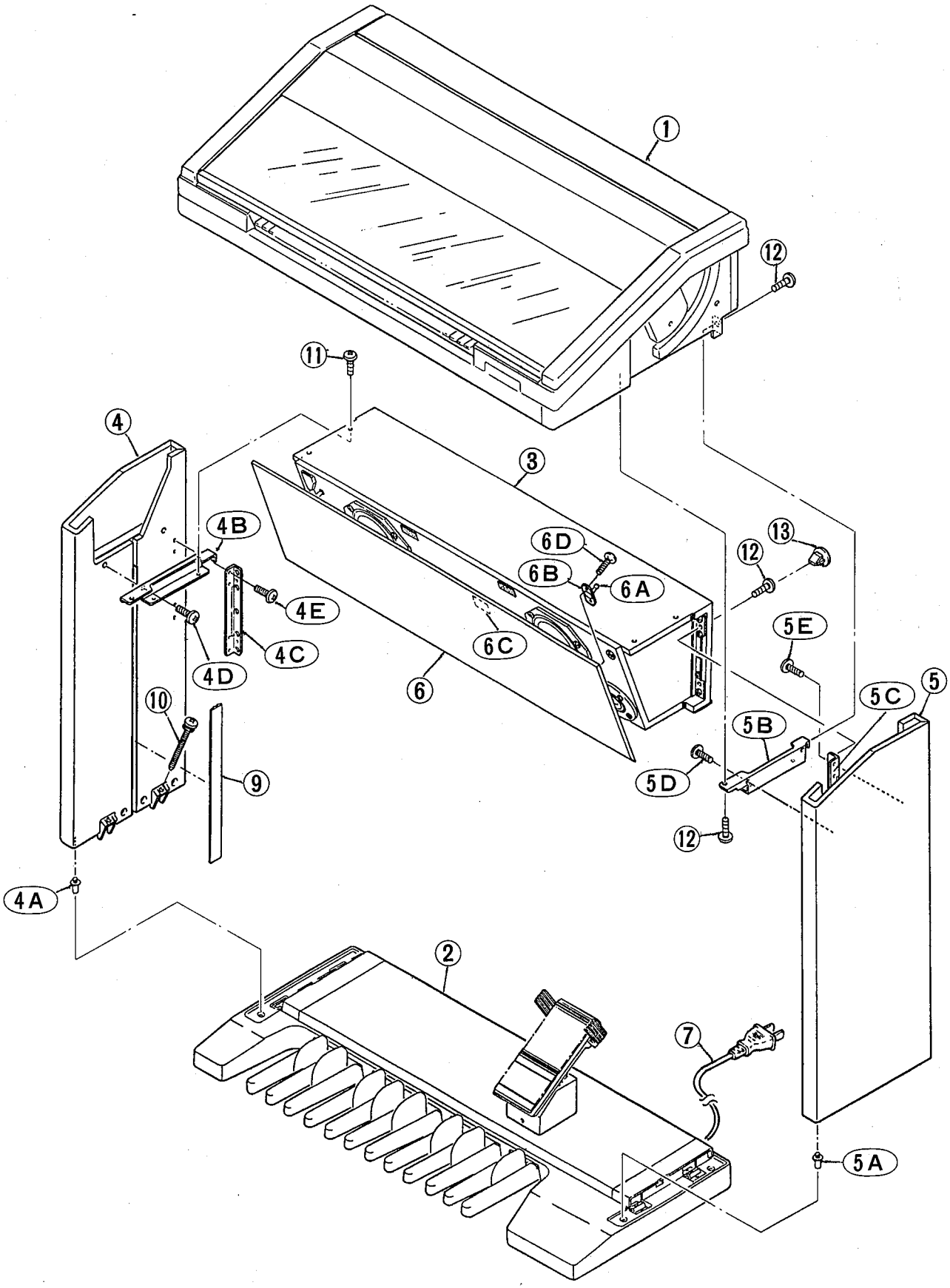

Ref. No.	Part No.	Description		部品名	Remarks	ランク
		<Overall Assembly>		<総組立>	(EL-70)	
1	--	Upper Unit		上部ユニット		
2	--	Pedal Unit		ペダルユニット		
3	--	Speaker Box Unit		ｽﾋﾟｰｶｰﾎﾞｯｸｽﾕﾆｯﾄ		
* 4	VK941500	Side Board Unit	Left	側板（左）ユニット		25
* 4A	VJ916000	Pin		ピン	2pcs	01
* 4B	VJ907200	Rail, Speaker	Left	ＳＰ取付レール（左）	1pc.	07
* 4C	VJ907500	Angle Bracket, Speaker		ＳＰ固定アングル	1pc.	04
* 4D	VE632500	Trus Head Screw	5.0X22 BL CE	＋トラスＴＰエバＣＥ	3pcs	01
* 4E	EP040220	Bind Head Tapping Screw	4.0X25 ZMC2Y	＋バインドＴＰ１種	4pcs	01
* 5	VK941800	Side Board Unit	Right	側板（右）ユニット		25
* 5A	VJ916000	Pin		ピン	2pcs	01
* 5B	VJ907300	Rail, Speaker	Right	ＳＰ取付レール（右）	1pc.	07
* 5C	VJ907500	Angle Bracket, Speaker		ＳＰ固定アングル	1pc.	04
* 5D	VE632500	Trus Head Screw	5.0X22 BL CE	＋トラスＴＰエバＣＥ	3pcs	01
* 5E	EP040220	Bind Head Tapping Screw	4.0X25 ZMC2Y	＋バインドＴＰ１種	4pcs	01
* 6	VJ934100	Grill Assembly		グリルＡss'y		17
6A	CB069610	Strike		ストライク	3pcs	01
6B	CB069620	Support		サポート	3pcs	01
* 6C	VL402300	Dual Lock	BL	ファスナー		
* 6D	VA214700	Flat Head Tapping Screw	3.0X10 ZMC2BL	＋皿ＴＰ１種	6pcs	01
* 7	VK652700	AC Cord	2P 7A 3.75m	電源コード	J	06
* 7	VK652900	AC Cord	2P 6A 3.75m	電源コード	H,D	06
* 7	VK653100	AC Cord	2P 6A 3.75m	電源コード	A	06
* 7	VK652800	AC Cord	UC-705-J04	電源コード	C	08
* 7	VJ959800	AC Cord	2P 6A 3.75m	電源コード	M	
* 7	VK653000	AC Cord	2P 6A 3.75m	電源コード	X	05
* 7	VJ959900	AC Cord	2P 6A 3.75m	電源コード	B	08
* 9	VJ949500	Cap	BR	キャップ	2pcs	04
* 10	VK023100	Pan Head Screw	5.0X40 ZMC2Y	＋ナベ尖リ先小ネジ	4pcs	01
* 11	VL007300	Trus Head Screw	5.0X25	＋トラス小ネジ	4pcs	02
12	ED350126	Bind Head Screw	5.0X12 ZMC2BL	＋バインド小ネジ	8pcs	01
13	VE636200	Cap	φ12	穴キャップ	4pcs	01
*	VL019100	Screw Set	3-M5	ネジセット		
* *	VE638200	Cap Set	VE63620×4	穴キャップセット		02
		Accessories		付属品		
	--	Bench		椅子		
*	VK946800	Floppy Disk, Registration	3.5" 1000K	ﾚｼﾞｽﾄﾒﾆｭｰﾃﾞｨｽｸ	J	10
*	VK946900	Floppy Disk, Registration	3.5" 1000K	ﾚｼﾞｽﾄﾒﾆｭｰﾃﾞｨｽｸ	U,C,H,D,B,A,X,M	10

*New Parts（新規部品）

ランク：Japan only

■UPPER UNIT（上部ユニット）

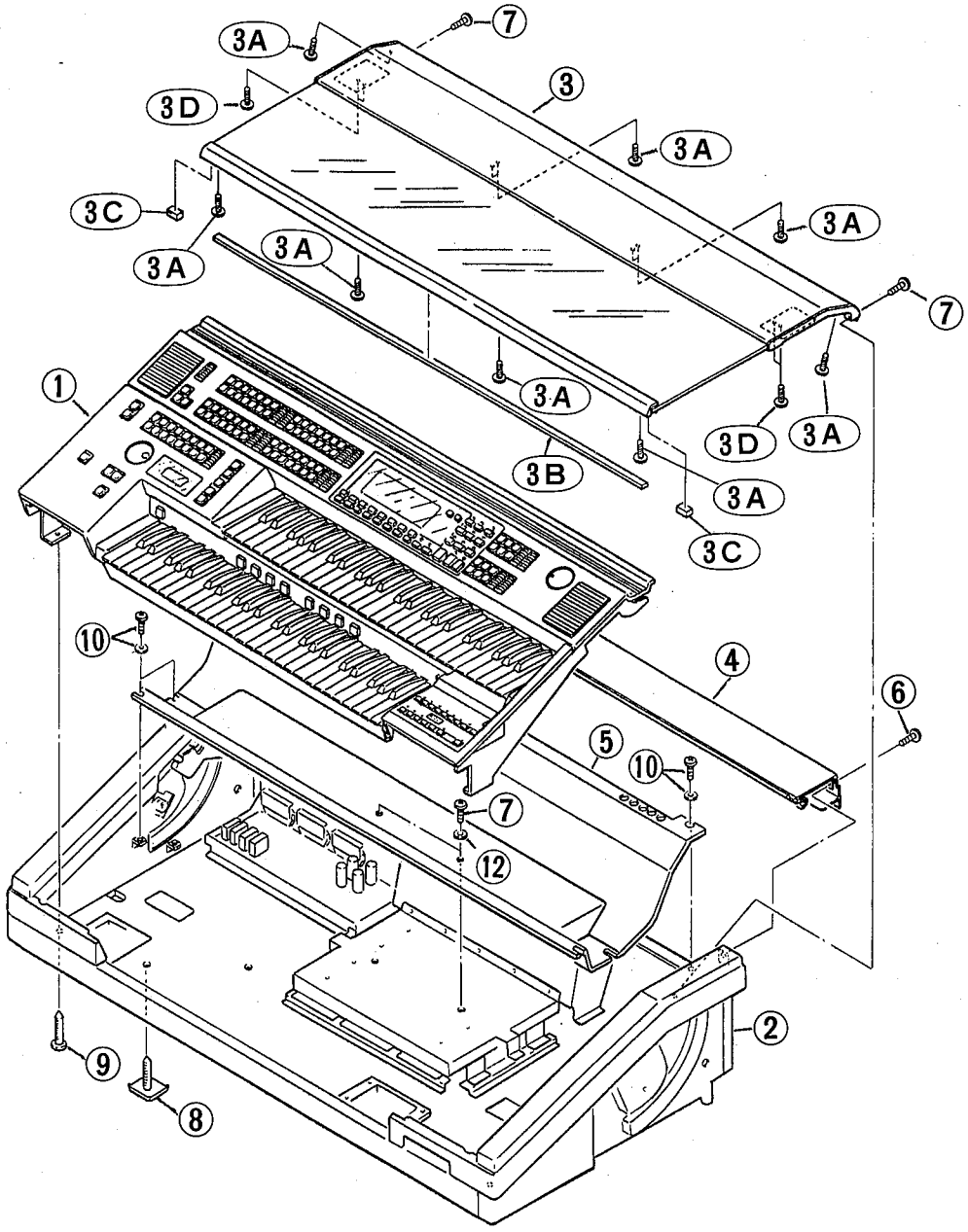

	Ref. No.	Part No.	Description		部品名	Remarks	ランク
			<Upper Unit>		<上部ユニット>	EL-70	
	1	--	Panel Assembly		パネルアセンブリー		
	2	--	Panel Case Unit		パネルケースユニット		
*	3	VJ950400	Cover Assembly		蓋アセンブリー		37
*	3A	VA819100	Bind Head Tapping Screw	3.0X6 ZMC2BL	+バインドPタイト	20pcs	01
*	3B	VJ955600	Cushion Tape	BL	クッションテープ		
*	3C	VJ955500	Button	BL	角ボタン	2pcs	
*	3D	VA819100	Bind Head Tapping Screw	3.0X6 ZMC2BL	+バインドPタイト	4pcs	01
*	4	VJ950600	Top Board Assembly		屋根アセンブリー		19
*	5	VL655600	Dust Proof Cover		ダストカバー	U,C	11
*	5	VJ928100	Dust Proof Cover		ダストカバー	J,H,D,B,A,X,M	10
*	6	VJ950800	Screw	4.0X10	平小ネジ	2pcs	01
*	7	VI693100	Bind Head Screw	4.0X8 ZMC2BL	+バインドSタイト	6pcs	01
	8	VD878100	Pan Head Screw	5.0X20 ZMC2BL	+ナベ尖リ先小ネジ	4pcs with ｶｸｻﾞ	01
*	9	VJ964500	Bind Head Screw	5.0X20 ZMC2BL	+バインド尖先小ネジ	3pcs	01
*	10	VD090100	Bind Head Screw	3.0X8 ZMC2BL	+バインドSタイト	9pcs with PW	
	12	EV220500	Flat Washer	φ5.0 ZMC2Y	平座金みがき丸	2pcs	01
		--	Adhesive Tape	12X50	粘着テープ	3pcs	

*New Parts（新規部品）

ランク：Japan only

■PANEL ASSEMBLY（パネルアセンブリー）

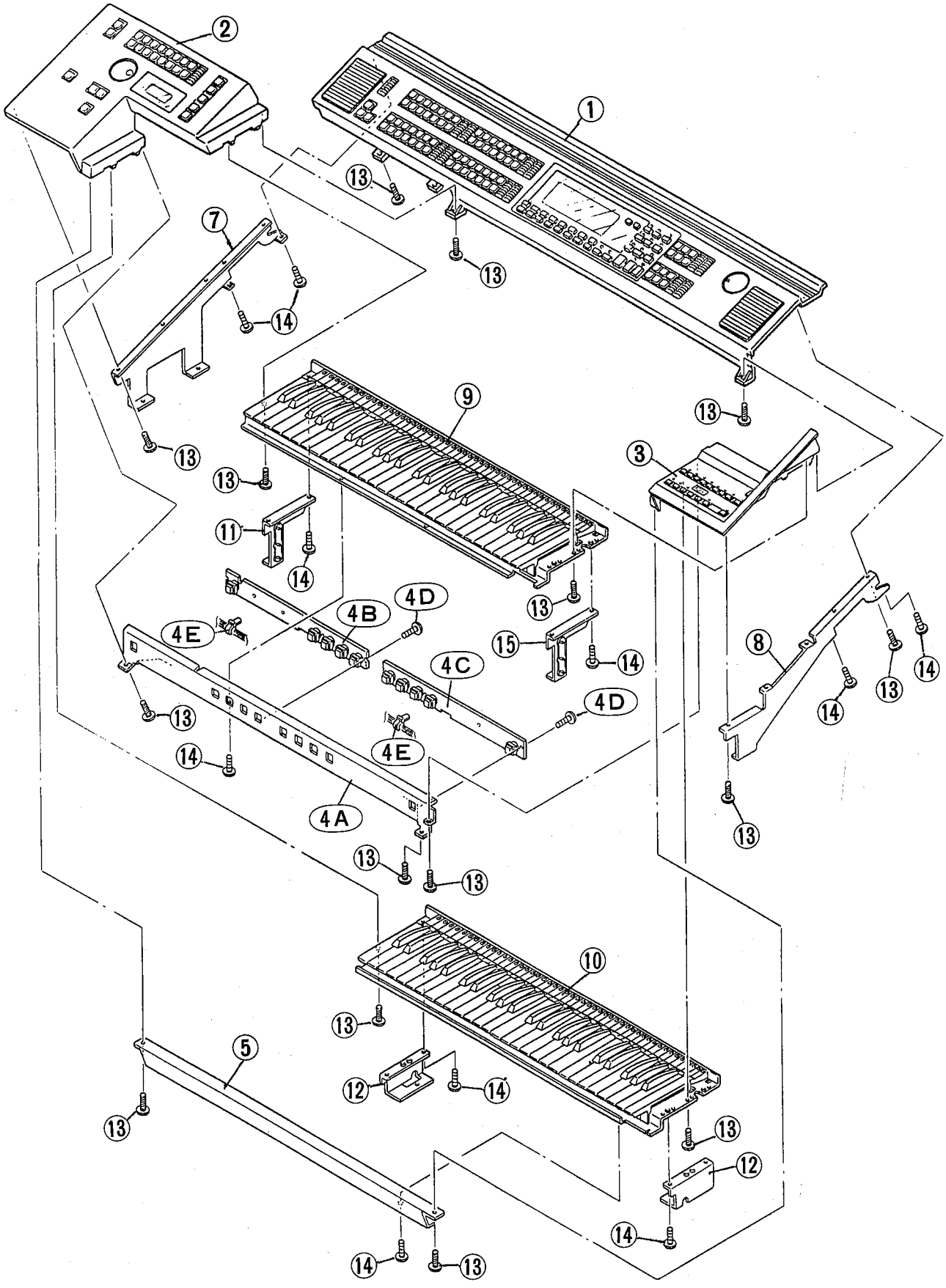

	Ref. No.	Part No.	Description		部品名	Remarks	ランク
			<Panel Assembly>		<パネルアセンブリー>	EL-70	
	1	--	Center Panel Unit		センターパネルユニット		
	2	--	Left Panel Unit		レフトパネルユニット		
	3	--	Right Panel Unit		ライトパネルユニット		
	4	--	Lower Front Rail, Assembly		口金（U）Ass'y		
*	4A	VJ951400	Front Rail	(U)	口金（U）		23
*	4B	VJ661500	Circuit Board	PS1	PS1シート		14
*	4C	VJ661600	Circuit Board	PS2	PS2シート		14
*	4D	VA078100	Bind Head Screw	3.0X5 ZMC2Y	+バインドSタイト	9pcs	01
	4E	CB069250	Cord Clamper	BK-1	束線止め	7pcs	01
*	5	VJ924600	Lower Front Rail		口金（L）		06
*	7	VJ502300	Side Support	Left	サイドサポート（左）	1pc.	07
*	8	VJ502400	Side Support	Right	サイドサポート（右）	1pc.	07
*	9	VK960700	Keyboard Assembly	C49 K12	FS鍵盤Ass'y	UK	34
*	10	VK960600	Keyboard Assembly	C49 K12	FS鍵盤Ass'y	LK	33
*	11	VJ496200	Support	Upper	サポート（上）	1pc.	05
*	12	VJ499900	Support	Lower	サポート（下）	2pcs	04
*	13	EP600270	Bind Head Tapping Screw	3.0X10 ZMC2Y	+バインドPタイト	28pcs	01
*	14	EP600530	Bind Head Screw	3.0X8 ZMC2BL	+バインドSタイト	18pcs	01
*	15	VL896500	Support Assembly	Upper	サポート（上）Ass'y	1pc.	
		CB069250	Cord Clamper	BK-1	束線止め		01
		CB070450	Cord Clamper	L=100	束線止め		01
		CB818540	Cord Clamper	T-30RF-2	インシュロックタイ		01
		--	Adhesive Tape	12×50	粘着テープ		
*		VK804000	Connector Assembly	16P-18P	PKA束線	DM_CN3-SW	09
		--	Connector Assembly	12P-1200	KRD-KRD束線	DM_CN5-LK_CN1	
		--	Connector Assembly	12P-1300	KRD-KRD束線	DM_CN2-UK_CN1	
		--	Connector Assembly	10P-300	KRD-KRD束線	PN1_CN4-PS1_CN2	
		--	Connector Assembly	11P-650	KRD-KRD束線	PN1_CN5-PS2_CN2	
		--	Connector Assembly	9P-320-350	KRD3束線	PN1_CN9-PS1,PS2	

*New Parts（新規部品）

ランク：Japan only

■ CENTER PANEL UNIT（センターパネルユニット）

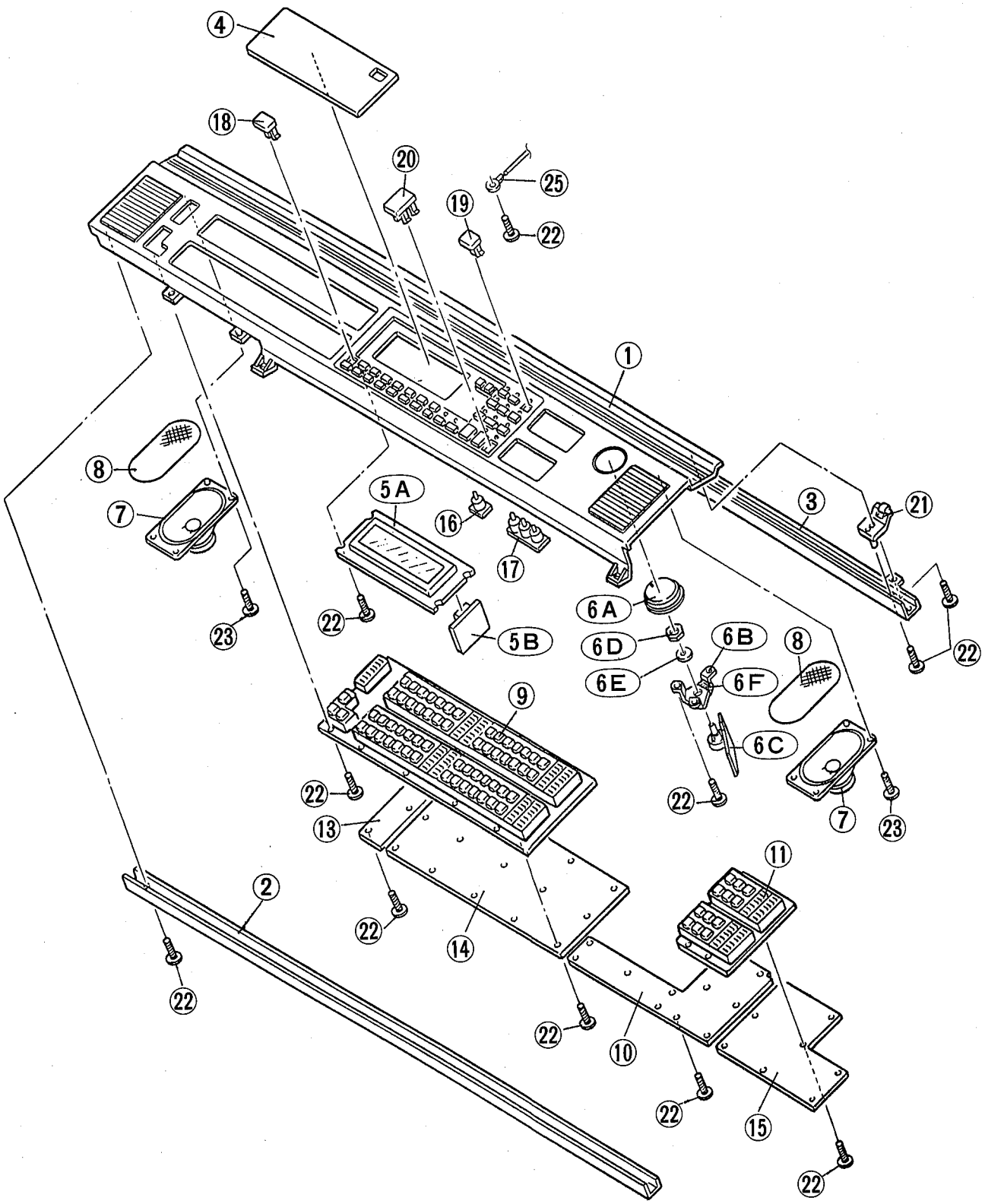

	Ref. No.	Part No.	Description		部品名	Remarks	ランク
			<Center Panel Unit>		<ｾﾝﾀｰﾊﾟﾈﾙﾕﾆｯﾄ>	EL-70	
*	1	VL648800	Center Panel		センターパネル	U	14
*	1	VK799700	Center Panel		センターパネル	J,C,H,D,B,A,X,M	15
*	2	VK825100	Rail, Front		補強レール（前）		06
*	3	VL594300	Rail, Rear		補強レール（後）		09
*	4	VK801000	Cover, LCD		ＬＣＤカバー		10
	5	--	Module, LCD Circuit Board		LCDｼｰﾄﾓｼﾞｭｰﾙ		
*	5A	VK862000	LCD	DMF5018NY-LY2	液晶ディスプレイ		33
*	5B	VK749700	Circuit Board	LCD	ＬＣＤシート		13
	6	--	MVR Unit		ＭＶＲユニット		
*	6A	VK784100	Volume Knob		ボリュームツマミ	MASTER VOLUME	02
	6B	VC873000	MA. VR Chassis		ＭＡ．ＶＲシャーシ		01
*	6C	VK646300	Circuit Board	MVR	ＭＶＲシート		10
*	6D	VD051700	Hexagonal Nut	φ7.0 ZMC2Y	特殊六角ナット	1pc.	01
	6E	VD051800	Flat Washer	7X12X0.5 ZMC2Y	特殊平座金	1pc.	01
*	6F	VL402400	Cushion	GY	クッション	1pc.	
*	7	XI169B00	Speaker	12×5cm 16Ω	スピーカー	Monitor 2pcs	08
*	8	VJ956400	Speaker Cloth		スピーカークロス	Monitor 2pcs	02
	9	--	Switch Escutcheon Assembly	(A)	スイッチ枠（Ａ）Ａss'y		
*	10	VK646100	Circuit Board	CP3	ＣＰ３シート		20
	11	--	Switch Escutcheon Assembly	(B)	スイッチ枠（Ｂ）Ａss'y		
*	13	VK645100	Circuit Board	CP1	ＣＰ１シート		09
*	14	VK645400	Circuit Board	CP2	ＣＰ２シート		29
*	15	VK646200	Circuit Board	CP4	ＣＰ４シート		21
*	16	VJ862800	LED Lens	(1)	ＬＥＤレンズ単連	2pcs	02
*	17	VJ803100	LED Lens	(3)	ＬＥＤレンズ３連	4pcs	02
*	18	VJ803700	Button		メニューボタン	DATA CONTROL	02
*	19	VJ404100	Switch Button	Small BL	スイッチボタン（小）	DATA CONTROL	02
*	20	VJ404000	Switch Button	Large	スイッチボタン（大）	DISPLAY SELECT	02
*	21	VJ956600	Roller Unit		ローラーユニット	2pcs	04
*	22	EP600520	Pan Head Tapping Screw	3.0X8 ZMC2Y	＋ナベＰタイト	78pcs	01
*	23	EP640500	Bind Head Tapping Screw	4.0X10 ZMC2Y	＋バインドＰタイト	8pcs	01
	25	--	Earth Wire	L=170	アース線	1pc.	
		--	Connector Assembly	2P-750	ＶＨ－ＶＨ束線	AUX_CN2-CP2_CN3	
		--	Connector Assembly	4P	モニター ＳＰ束線	PU_CN16-M.SP.	
		--	Connector Assembly	9P-100	ＫＲＤ－ＫＲＤ束線	CP1_CN1-CP2_CN5	
		--	Connector Assembly	8P-1100	ＫＲＤ－ＫＲＤ束線	DM_CN7-LCD_CN1	
		--	Connector Assembly	11P-1100	ＫＲＤ－ＫＲＤ束線	DM_CN6-LCD_CN2	
		--	Connector Assembly	8P-1300	ＫＲＤ－ＫＲＤ束線	ANG_CN3-MVR_CN1	
		--	Connector Assembly	5P-1600	ＫＲＤ－ＫＲＤ束線	DM_CN8-LCD_CN3	
		--	Connector Assembly	6P-1000～400	ＫＲＤ５束線	PU_CN12=CP4_CN2	
		--	Connector Assembly	10P-1000～450	ＫＲＤ５束線	DM_CN1=PN4_CN1	

*New Parts（新規部品）

ランク：Japan only

■LEFT PANEL UNIT（レフトパネルユニット）

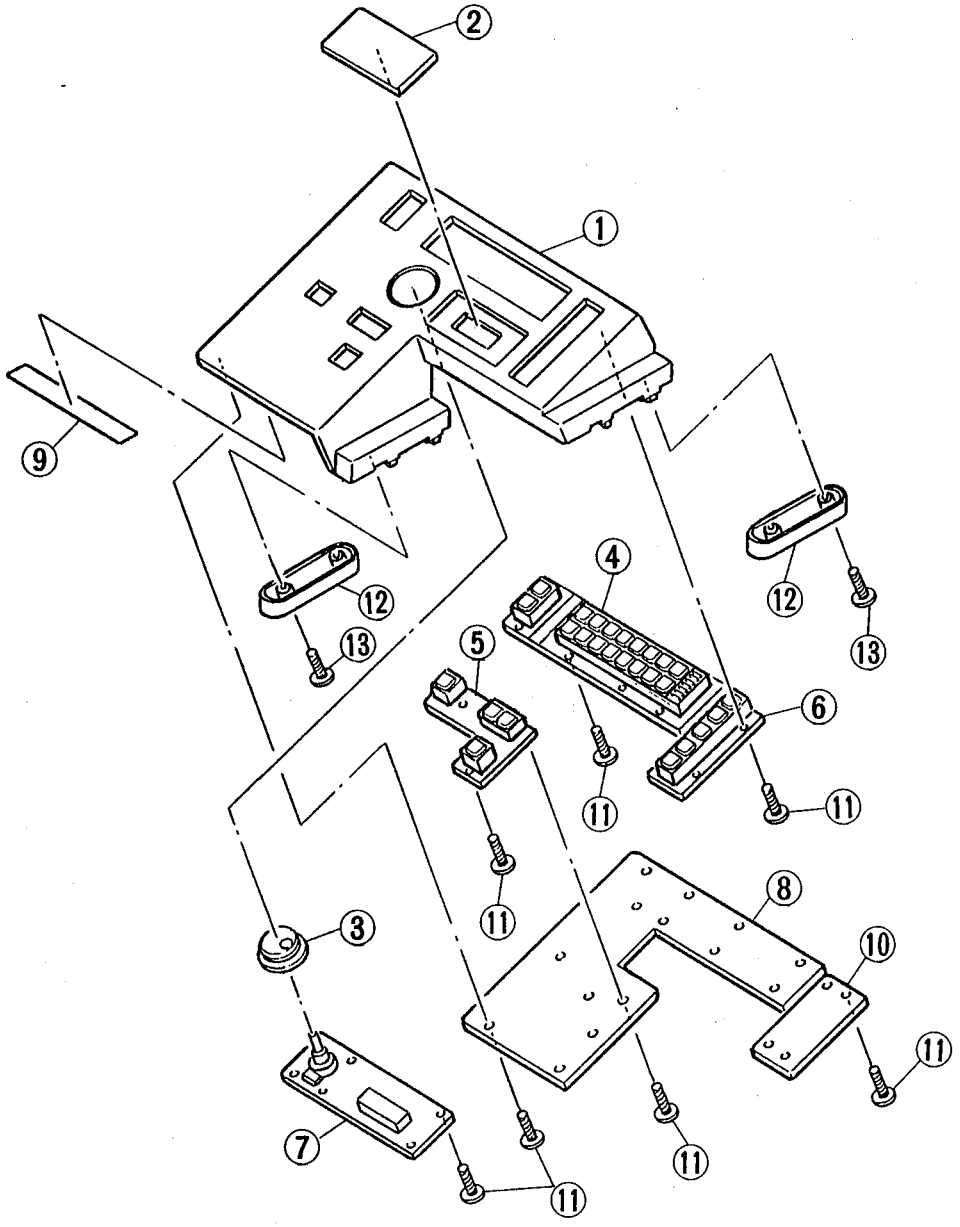

	Ref. No.	Part No.	Description		部品名	Remarks	ランク
			<Left Panel Unit>		<レフトパネルユニット>	EL-70	
*	1	VK912200	Left Panel		レフトパネル		10
*	2	VK800800	Cover, Tempo		テンポカバー	TEMPO, BAR/BEAT	08
*	3	VK784300	Knob, Tempo		テンポツマミ	TEMPO	02
	4	--	Switch Escutcheon Assembly	(D)	スイッチ枠(D)Ass'y		
	5	--	Switch Escutcheon Assembly	(E)	スイッチ枠(E)Ass'y		
	6	--	Switch Escutcheon Assembly	(F)	スイッチ枠(F)Ass'y		
*	7	VK645200	Circuit Board	PN2	PN2シート		14
*	8	VK644800	Circuit Board	PN1	PN1シート		23
	9	--	Spacer		不織布	1pc.	
*	10	VK644900	Circuit Board	PN3	PN3シート		08
*	11	EP600520	Pan Head Tapping Screw	3.0X8 ZMC2Y	+ナベPタイト	40pcs	01
*	12	VJ493800	Bracket		ブラケット	2pc.	02
*	13	EP600270	Bind Head Tapping Screw	3.0X10 ZMC2Y	+バインドPタイト	4pcs	01
		--	Connector Assembly	7P-900	KRD-KRD束線	ANG_CN1-PN1_CN3	

*New Parts（新規部品）

ランク：Japan only

■RIGHT PANEL UNIT（ライトパネルユニット）

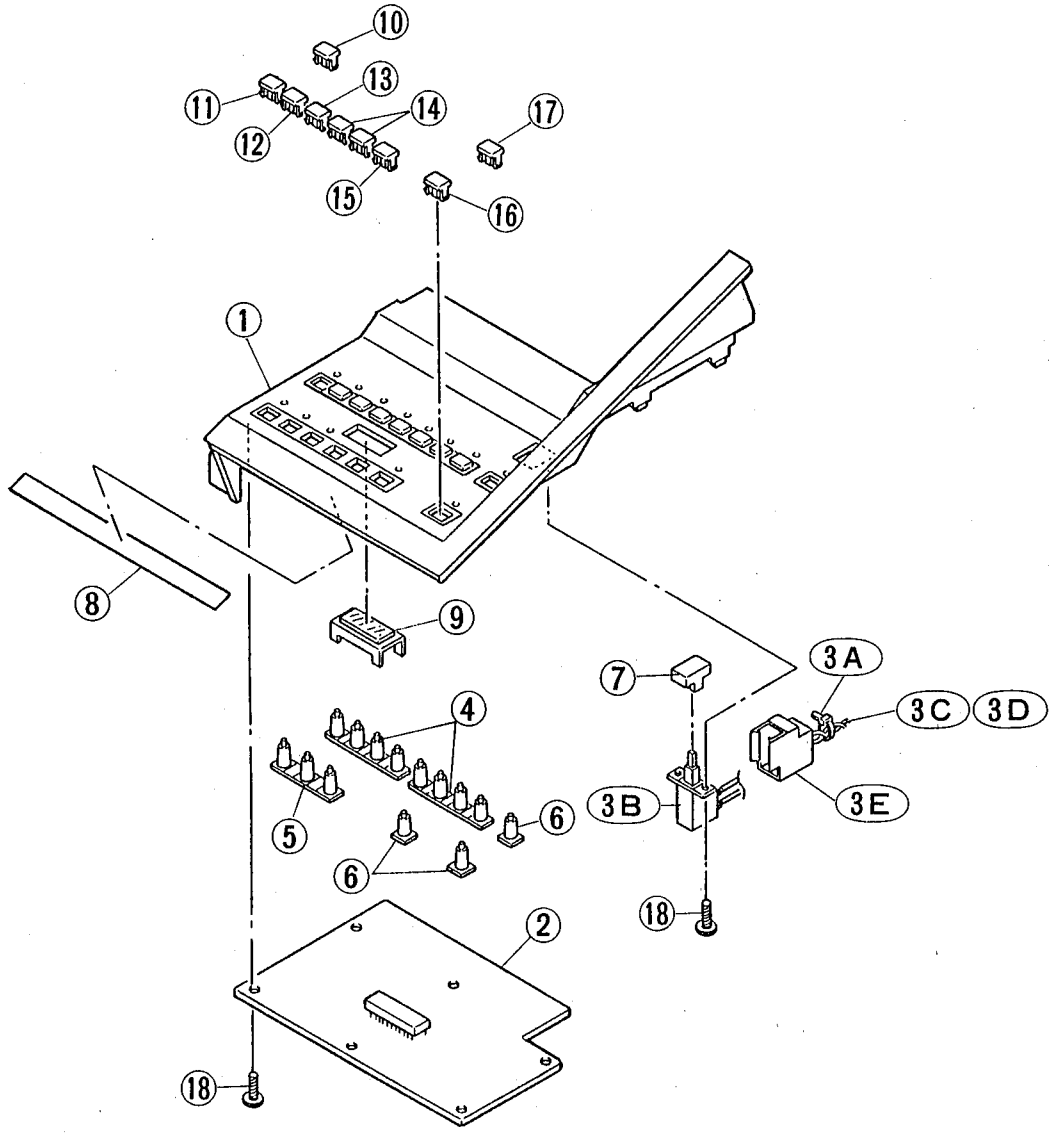

	Ref. No.	Part No.	Description		部品名	Remarks	ランク
			<Right Panel Unit>		<ライトパネルユニット>	EL-70	
*	1	VK799200	Right Panel		ライトパネル		09
*	2	VK645000	Circuit Board	PN4	ＰＮ４シート		19
	3	--	Cable, Power Switch		ＰＳＷ束線		
	3A	CB069250	Cord Clamper	BK-1	束線止め	3pcs	01
	3B	VC843500	Push Switch	SDDLB1	プッシュスイッチ	POWER	03
	3C	--	Wire	GY	ビニール線		
	3D	--	Wire	WH	ビニール線		
	3E	CB049980	Switch Cover	BL	パワースイッチカバー	POWER	01
*	4	VK783700	LED Lens	(4)	ＬＥＤレンズ（４連）	2pcs	02
*	5	VK936900	LED Lens	(3)	ＬＥＤレンズ（３連）	1pc.	02
*	6	VK937000	LED Lens	(1)	ＬＥＤレンズ（単連）	3pcs	
*	7	VK782100	Button, Power Switch		ﾊﾟﾜｰｽｲｯﾁﾎﾞﾀﾝ	POWER	
	8	--	Spacer		不織布	1pc.	
*	9	VJ803800	Lens		レンズ	1pc.	02
*	10	VL253100	Switch Button	(S) BL	スイッチボタン（Ｓ）	8pcs SONG	02
*	11	VK910300	Switch Button	Small	ＳＷボタン（小）	PAUSE	03
*	12	VK910400	Switch Button	Small	ＳＷボタン（小）	STOP	03
*	13	VK910500	Switch Button	Small	ＳＷボタン（小）	PLAY	03
*	14	VK910600	Switch Button	Small	ＳＷボタン（小）	FF,REW/TEMPO +-	03
*	15	VK910700	Switch Button	Small	ＳＷボタン（小）	RECORD/FORMAT	03
*	16	VL263400	Switch Button	(S) GY	スイッチボタン（Ｓ）	CUSTOM PLAY	02
*	17	VJ404100	Switch Button	Small BL	スイッチボタン（小）	SHIFT	02
*	18	EP600520	Pan Head Tapping Screw	3.0X8 ZMC2Y	＋ナベＰタイト	8pcs	01

*New Parts（新規部品）
ランク：Japan only

■ SWITCH ESCUTCHEON Ass'y (A)（スイッチ枠Ass'y(A)）

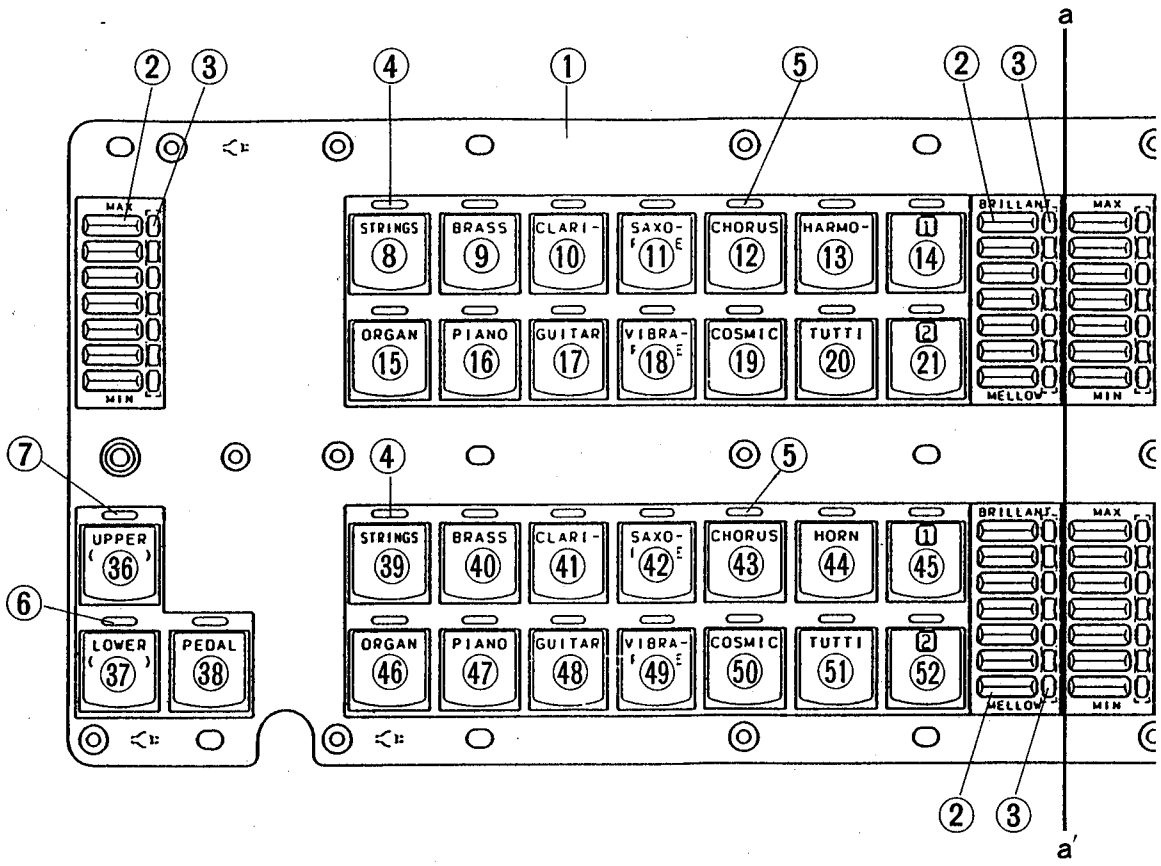

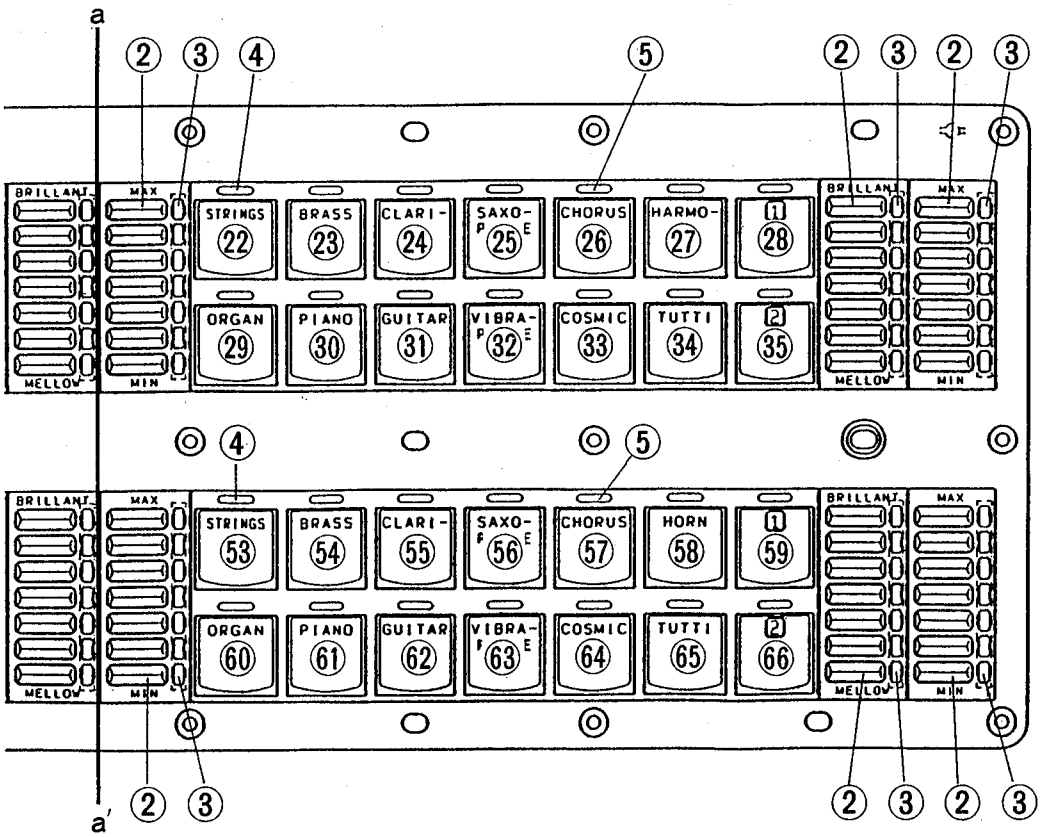

	Ref. No.	Part No.	Description		部品名	Remarks	ランク
			<Switch Escutcheon Ass'y>	(A)	<スイッチ枠(A)Ass'y>	EL-70	
*	1	VK798800	Escutcheon	(A)	スイッチ枠（A）		
*	2	VK784400	Volume Button		ボリュームボタン	63pcs	02
*	3	VK783300	Volume Lens		ボリュームレンズ	9pcs	02
*	4	VK786900	Lens		音色レンズ（４連）	8pcs	
*	5	VK787000	Lens		音色レンズ（３連）	8pcs	02
*	6	VK787100	Lens		音色レンズ（２連）	1pc.	02
*	7	VK787200	Lens		音色レンズ（単連）	1pc.	02
*	8	VK921600	Button	OR	ボタン	STRINGS	
*	9	VK921700	Button	OR	ボタン	BRASS	
*	10	VK921800	Button	OR	ボタン	CLARI-NET	
*	11	VK921900	Button	OR	ボタン	SAXO-PHONE	
*	12	VK922000	Button	OR	ボタン	CHORUS	
*	13	VK922100	Button	OR	ボタン	HARMO-NICA	
*	14	VK922200	Button	OR	ボタン	1	
*	15	VK922300	Button	OR	ボタン	ORGAN	
*	16	VK922400	Button	OR	ボタン	PIANO	
*	17	VK922500	Button	OR	ボタン	GUITAR	
*	18	VK922600	Button	OR	ボタン	VIBRA-PHONE	
*	19	VK922700	Button	OR	ボタン	COSMIC	
*	20	VK922800	Button	OR	ボタン	TUITTI	
*	21	VK922900	Button	OR	ボタン	2	
*	22	VK923000	Button	YE	ボタン	STRINGS	
*	23	VK923100	Button	YE	ボタン	BRASS	
*	24	VK923200	Button	YE	ボタン	CLARI-NET	
*	25	VK923300	Button	YE	ボタン	SAXO-PHONE	
*	26	VK923400	Button	YE	ボタン	CHORUS	
*	27	VK923500	Button	YE	ボタン	HARMO-NICA	
*	28	VK923600	Button	YE	ボタン	1	
*	29	VK923700	Button	YE	ボタン	ORGAN	
*	30	VK923800	Button	YE	ボタン	PIANO	
*	31	VK923900	Button	YE	ボタン	GUITAR	
*	32	VK924000	Button	YE	ボタン	VIBRA-PHONE	
*	33	VK924100	Button	YE	ボタン	COSMIC	
*	34	VK924200	Button	YE	ボタン	TUTTI	
*	35	VK924300	Button	YE	ボタン	1	
*	36	VK925200	Button	GY	ボタン	UPPER(KNEE)	
*	37	VK925300	Button	GY	ボタン	LOWER(KNEE)	
*	38	VK925400	Button	GY	ボタン	PEDAL	
*	39	VK925500	Button	VI	ボタン	STRINGS	
*	40	VK925700	Button	VI	ボタン	BRASS	
*	41	VK925800	Button	VI	ボタン	CLARI-NET	
*	42	VK925900	Button	VI	ボタン	SAXO-PHONE	
*	43	VK926000	Button	VI	ボタン	CHORUS	
*	44	VK926100	Button	VI	ボタン	HORN	
*	45	VK926200	Button	VI	ボタン	1	
*	46	VK926300	Button	VI	ボタン	ORGAN	
*	47	VK926400	Button	VI	ボタン	PIANO	
*	48	VK926500	Button	VI	ボタン	GUITAR	
*	49	VK926600	Button	VI	ボタン	VIBRA-PHONE	
*	50	VK926700	Button	VI	ボタン	COSMIC	
*	51	VK926800	Button	VI	ボタン	TUTTI	
*	52	VK926900	Button	VI	ボタン	2	
*	53	VK927000	Button	BE	ボタン	STRINGS	
*	54	VK927100	Button	BE	ボタン	BRASS	
*	55	VK927200	Button	BE	ボタン	CLARI-NET	
*	56	VK927300	Button	BE	ボタン	SAXO-PHONE	
*	57	VK927400	Button	BE	ボタン	CHORUS	
*	58	VK927500	Button	BE	ボタン	HORN	
*	59	VK927600	Button	BE	ボタン	2	
*	60	VK927700	Button	BE	ボタン	ORGAN	
*	61	VK927800	Button	BE	ボタン	PIANO	
*	62	VK927900	Button	BE	ボタン	GUITAR	
*	63	VK928000	Button	BE	ボタン	VIBRA-PHONE	
*	64	VK928100	Button	BE	ボタン	COSMIC	
*	65	VK928200	Button	BE	ボタン	TUTTI	
*	66	VK928300	Button	BE	ボタン	2	

*New Parts（新規部品）

ランク：Japan only

■ SWITCH ESCUTCHEON Ass'y (B)（スイッチ枠Ass'y(B)）

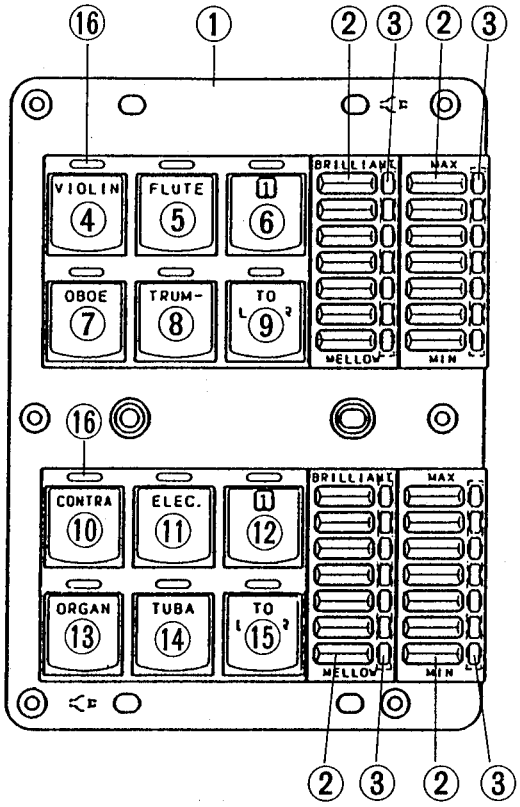

	Ref. No.	Part No.	Description		部品名	Remarks	ランク
			<Switch Escutcheon Ass'y>	(B)	<スイッチ枠(B)Ass'y>	EL-70	
*	1	VK798900	Escutcheon	(B)	スイッチ枠（B）		
*	2	VK784400	Volume Button		ボリュームボタン	28pcs	02
*	3	VK783300	Volume Lens		ボリュームレンズ	4pcs	02
*	4	VK924400	Button	RE	ボタン	VIOLIN	
*	5	VK924600	Button	RE	ボタン	FLUTE	
*	6	VK924700	Button	RE	ボタン	1	
*	7	VK924800	Button	RE	ボタン	OBOE	
*	8	VK924900	Button	RE	ボタン	TRUM-PET	
*	9	VK925000	Button	RE	ボタン	TO LOWER	
*	10	VK928400	Button	BR	ボタン	CONTRA BASS	
*	11	VK928500	Button	BR	ボタン	ELEC.BASS	
*	12	VK928600	Button	BR	ボタン	1	
*	13	VK928700	Button	BR	ボタン	ORGAN BASS	
*	14	VK928800	Button	BR	ボタン	TUBA	
*	15	VK928900	Button	BR	ボタン	TO LOWER	
*	16	VK787000	Lens	(3)	音色レンズ（３連）	4pcs	02

*New Parts（新規部品）

ランク：Japan only

■ SWITCH ESCUTCHEON Ass'y (D)（スイッチ枠Ass'y(D)）

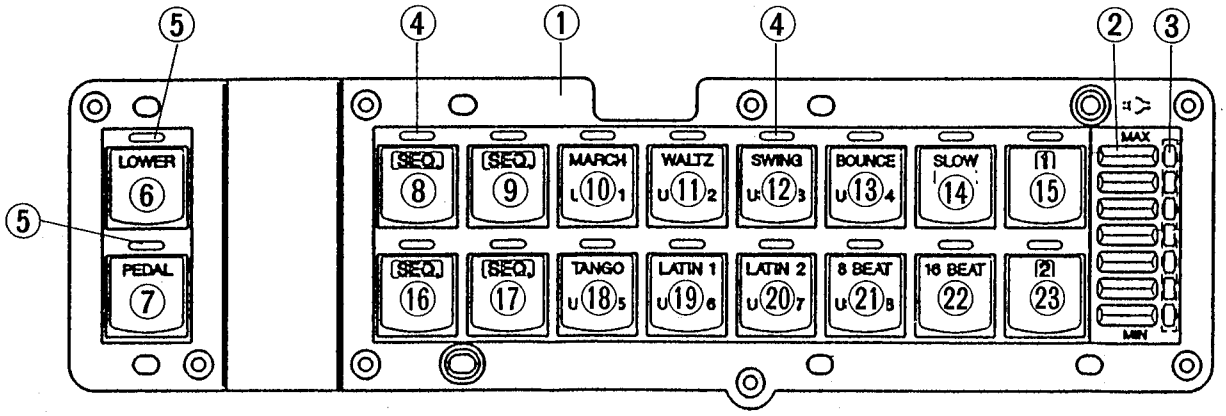

	Ref. No.	Part No.	Description		部品名	Remarks	ランク
			<Switch Escutcheon Ass'y>	(D)	<スイッチ枠(D)Ass'y>	EL-70	
*	1	VK799100	Escutcheon	(D)	スイッチ枠（D）		
*	2	VK784400	Volume Button		ボリュームボタン	7pcs	02
*	3	VK783300	Volume Lens		ボリュームレンズ	1pc.	02
*	4	VK786900	Lens	(4)	音色レンズ（４連）	4pcs	
*	5	VK787200	Lens	(1)	音色レンズ（単連）	2pcs	02
*	6	VK929600	Button	GY	ボタン	LOWER	
*	7	VK925400	Button	GY	ボタン	PEDAL	
*	8	VK929700	Button	GY	ボタン	SEQ.1	
*	9	VK929800	Button	GY	ボタン	SEQ.2	
*	10	VK929900	Button	GY	ボタン	MARCH USER 1	
*	11	VK930000	Button	GY	ボタン	WALTZ USER 2	
*	12	VK930100	Button	GY	ボタン	SWING USER 3	
*	13	VK930200	Button	GY	ボタン	BOUNCE USER 4	
*	14	VK930300	Button	GY	ボタン	SLOW ROCK A	
*	15	VK936700	Button	GY	ボタン	1 B	
*	16	VK930400	Button	GY	ボタン	SEQ.3	
*	17	VK930500	Button	GY	ボタン	SEQ.4	
*	18	VK930600	Button	GY	ボタン	TANGO USER 5	
*	19	VK930700	Button	GY	ボタン	LATIN 1 USER 6	
*	20	VK930800	Button	GY	ボタン	LATIN 2 USER 7	
*	21	VK931000	Button	GY	ボタン	8 BEAT USER 8	
*	22	VK931100	Button	GY	ボタン	16 BEAT C	
*	23	VK936800	Button	GY	ボタン	2 D	

*New Parts（新規部品）

ランク：Japan only

■ SWITCH ESCUTCHEON Ass'y (E)/(F)（スイッチ枠Ass'y(E)/(F)）

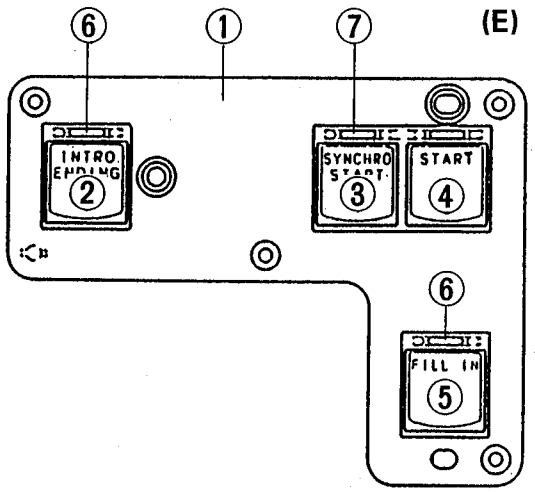

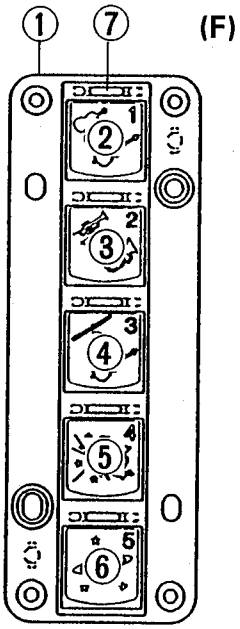

	Ref. No.	Part No.	Description		部品名	Remarks	ランク
			<Switch Escutcheon Ass'y>	(E)	<スイッチ枠(E)Ass'y>	EL-70	
*	1	VK786600	Escitcheon	(E)	スイッチ枠（E）		06
*	2	VK931200	Button	GY	ボタン	INTRO. ENDING	
*	3	VK931300	Button	GY	ボタン	SYNCHRO START	
*	4	VK931400	Button	GY	ボタン	START	
*	5	VK931500	Button	GY	ボタン	FILL IN	
*	6	VK787200	Lens	(1)	音色レンズ（単連）	2pcs	02
*	7	VK787100	Lens	(2)	音色レンズ（2連）	1pc.	02

*New Parts（新規部品）　　ランク：Japan only

	Ref. No.	Part No.	Description		部品名	Remarks	ランク
			<Switch Escutcheon Ass'y>	(F)	<スイッチ枠(F)Ass'y>	EL-70	
*	1	VK786700	Escutcheon	(F)	スイッチ枠（F）		06
*	2	VK931600	Button	GY	ボタン	1 (REG.MEMORY)	
*	3	VK931700	Button	GY	ボタン	2 (REG.MEMORY)	
*	4	VK931800	Button	GY	ボタン	3 (REG.MEMORY)	
*	5	VK931900	Button	GY	ボタン	4 (REG.MEMORY)	
*	6	VK932000	Button	GY	ボタン	5 (REG.MEMORY)	
*	7	VK787200	Lens	(1)	音色レンズ（単連）	5pcs	02

*New Parts（新規部品）　　ランク：Japan only

■KEYBOARD ASSEMBLY(UK,LK) (FS鍵盤Ass'y(UK,LK))

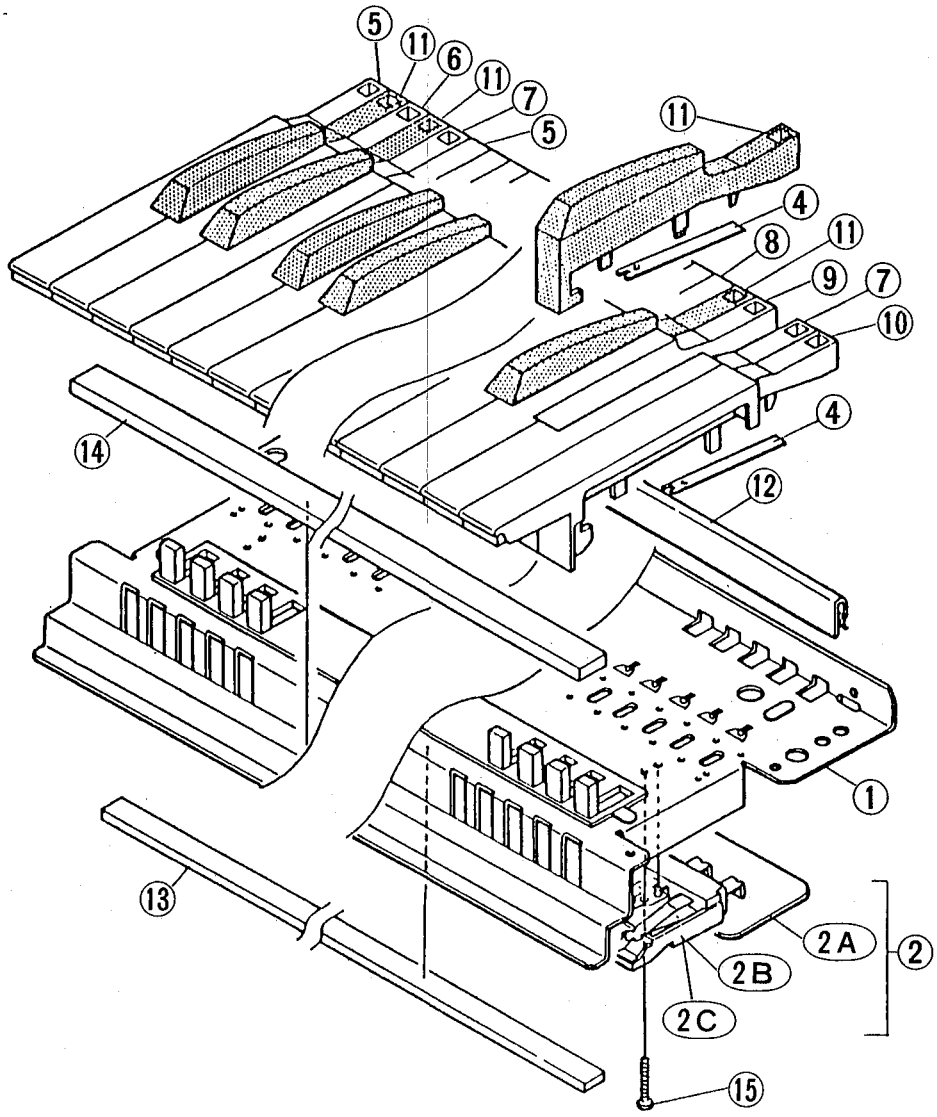

	Ref.. No.	Part No.	Description		部品名	Remarks	ランク
*		VK960700	<Keyboard Assembly >	C49 K12	<FS鍵盤Ass'y>	UK (EL-70)	34
*		VK960600	<Key Board Assembly>	C49 K12	<FS鍵盤Ass'y>	LK	33
	1	--	MK Frame	C49 AT	MKフレーム		
*	2	VK164300	Switch Unit		スイッチユニット		22
*	2A	VK749000	Circuit Board	MK	MKシート		15
	2B	NB107120	Switch Assembly	12Q FS	スイッチAss'y		08
	2C	NB107110	Switch Assembly	13K FS	スイッチAss'y		08
	4	AA055430	Key Spring		鍵バネ	49pcs	02
	5	NB107540	White Key Assembly	C,F	白鍵Ass'y	8pcs	03
	6	NB107550	White Key Assembly	D	白鍵Ass'y	4pcs	03
	7	NB107560	White Key Assembly	B,E	白鍵Ass'y	8pcs	03
	8	NB107570	White Key Assembly	G	白鍵Ass'y	4pcs	03
	9	NB107580	White Key Assembly	A	白鍵Ass'y	4pcs	03
	10	NB107590	White Key Assembly	C'	白鍵Ass'y	1pc.	03
	11	NB107600	Black Key Assembly		黒鍵Ass'y	20pcs	03
	12	CB045770	Stopper		ストッパー		02
*	13	VK984500	Felt	665X6X3 RE	フェルト		03
*	14	VJ479500	PC Sensor	MK-FS49TO	PCセンサー		10
*	15	EP600810	Bind Head Screw	3.0X16 ZMC2BL	+バインドエバタイト	12pcs	01

*New Parts (新規部品)

ランク : Japan only

■PANEL CASE UNIT（パネルケースユニット）

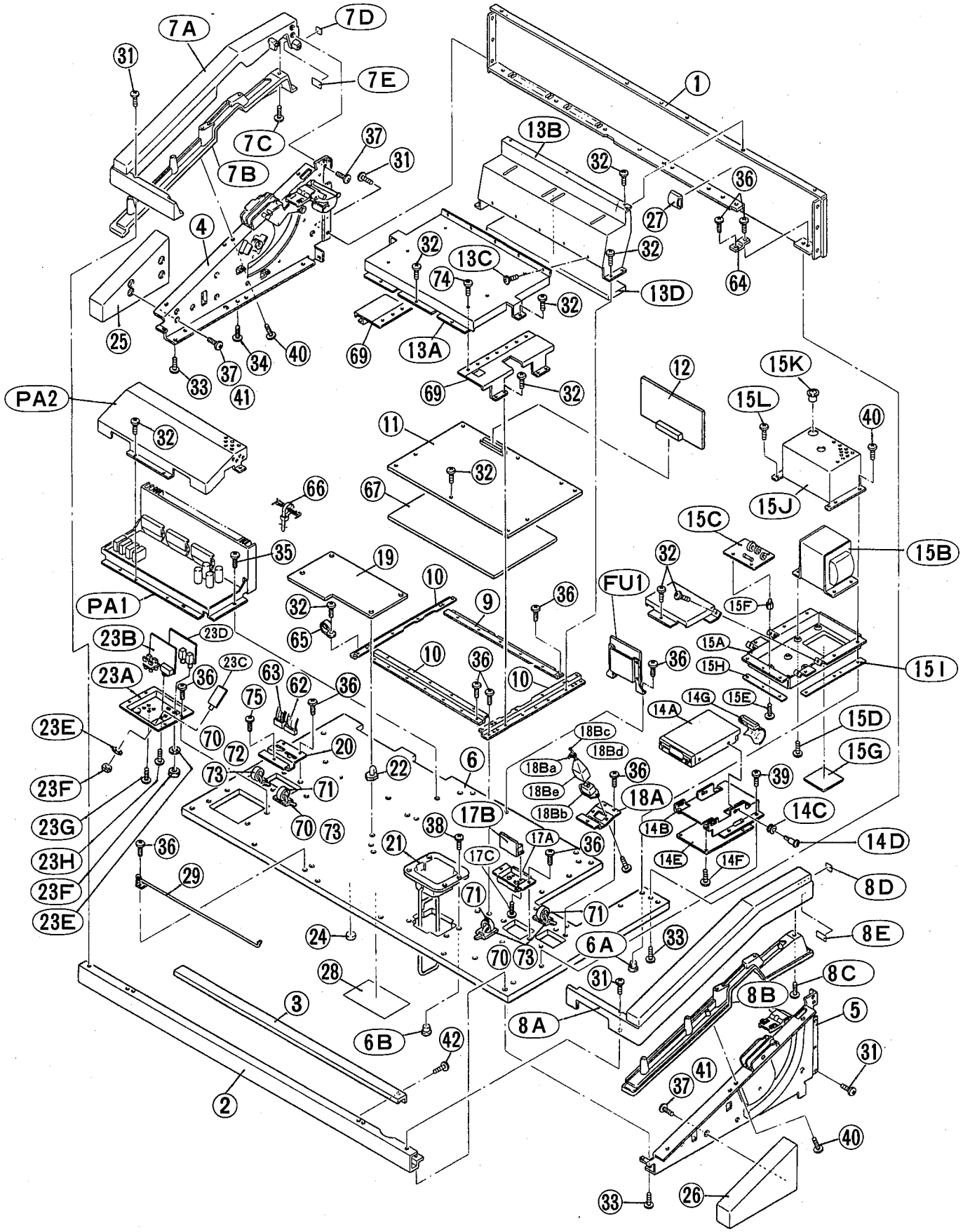

	Ref. No.	Part No.	Description		部品名	Remarks	ランク
			<Panel Case Unit>		<ﾊﾟﾈﾙｹｰｽﾕﾆｯﾄ>	EL-70	
*	1	VL384000	Back Top Board		背面カマチ	J	16
*	1	VL383900	Back Top Board		背面カマチ	U,C,H,D,B,A,X,M	17
*	2	VK384600	Front Rail		口棒	J	
*	2	VJ915300	Front Rail		口棒	U,C,H,D,B,A,X,M	10
*	3	VJ955900	Cover, Front Rail		口棒カバー		09
	4	--	Arm Unit	Left	腕木ユニット（左）		
	5	--	Arm Unit	Right	腕木ユニット（右）		
	6	--	Keybed Assembly		棚板Ass'y		
*	6A	VD238200	Nut	B4.0X9.5 ZMC2BL	鬼目ナット	16pcs	01
	6B	VB923300	Nut	B3.0X9.5 ZMC2BL	鬼目ナット	4pcs	01
*	7	VJ952100	Arm Cap Unit	Left	アームユニット（左）		11
	7A	--	Arm Cap	Left	アームキャップ（左）		
	7B	--	Arm Under Case	Left	アーム下ケース（左）		
*	7C	EP600270	Bind Head Tapping Screw	3.0X10 ZMC2Y	+バインドPタイト	5pcs	01
*	7D	VL504200	Cushion	BL (1)	クッション（1）	1pc.	
*	7E	VL551900	Cushion	BL (2)	クッション（2）	2pcs	
*	8	VJ952300	Arm Cap Unit	Right	アームユニット（右）		11
	8A	--	Arm Cap	Right	アームキャップ（右）		
	8B	--	Arm Under Case	Right	アーム下ケース（右）		
*	8C	EP600270	Bind Head Tapping Screw	3.0X10 ZMC2Y	+バインドPタイト	5pcs	01
*	8D	VL504200	Cushion	BL (1)	クッション（1）	1pc.	
*	8E	VL551900	Cushion	BL (2)	クッション（2）	2pcs	
*	9	VK783100	Angle Bracket, DM	(A)	ラック金具（A）	2pcs	03
*	10	VK783200	Angle Bracket, DM	(B)	ラック金具（B）	2pcs	03
*	11	VL546600	Circuit Board	DM	DMシート	J S/#1001～	89
*	11	VL861700	Circuit Board	DM(4)	DMシート	J	
*	11	VK836800	Circuit Board	DM(4)	DMシート	U,C,H,D,B,A,X,M	89
*	12	VK803700	Circuit Board	ROM1(4)	ROM1シート	J S/#1001～	51
*	12	VK837100	Circuit Board	ROM1(4)	ROM1シート		52
	13	--	DM Cover Assembly		DMカバーAss'y		
*	13A	VK782600	Shield Cover, DM		DMシールドカバー		
*	13B	VK782700	Shield Cover, DM	Rear	DMｼｰﾙﾄﾞｶﾊﾞｰ(後)		
	13C	ED030066	Bind Head Screw	3.0X6 ZMC2Y	+バインドSタイト	3pcs	01
*	13D	VL383700	Cushion, DM	T7×110×50	DMクッション		
	14	--	MDR Assembly		MDRAss'y		
*	14A	VJ437000	Floppy Disk Drive	3.5" 1M/2M BL	FDD		31
*	14B	VK782800	Angle Bracket, MDR		MDR取り付板		05
	14C	VC886900	Insulator, FDD		FDDインシュレータ	4pcs	01
	14D	VF916400	Cap Screw	3.0X7.5 ZMC2Y	段付きカップネジ	4pcs	01
*	14E	VK748400	Circuit Board	MDR	MDRシート	J S/#1001～	36
*	14E	VK837500	Circuit Board	MDR(4)	MDRシート		38
*	14F	EP600070	Bind Head Screw	3.0X8 ZMC2Y	+バインドSタイト	4pcs	01
*	14G	VK793200	Flat Cable	34P-80	フラットケーブル束線	MDR_CN2-FDD_CN2	08
	15	--	Case Assembly, PT		トランスケースAss'y		
*	15A	VK783600	Case, Power Transformer		トランスPRMケース		09
*	15B	XI082A00	Power Transformer		電源トランス	J	18
*	15B	XI155A00	Power Transformer		電源トラランス	D,H,B,A	18
*	15B	XI154C00	Power Transformer		電源トラランス	U,C	
*	15B	XI156A00	Power Transformer		電源トランス	X,M	18
*	15C	VJ636200	Circuit Board	PRM	PRMシート	J	10
*	15C	VJ636400	Circuit Board	PRM	PRMシート	D,H,B,A	11
*	15C	VJ636300	Circuit Board	PRM	PRMシート	U,C	11
*	15C	VJ636500	Circuit Board	PRM	PRMシート	X,M	11
*	15D	VI693100	Bind Head Screw	4.0X8 ZMC2BL	+バインドSタイト	4pcs	01
*	15E	VK919700	Bind Head Tapping Screw	3.5X8 ZMC2BL	+バインドTP2種	4pcs	
	15F	VF029400	Spacer		タッピングスペーサー	4pcs	01
*	15G	VK919600	Felt	BL	フェルト		
*	15H	VL383500	Insulator	(B) T2×125×16	インシュレータ（B）	1pc.	
*	15I	VL383400	Insulator	(A) T2×195×16	インシュレータ（A）	2pcs	
*	15J	VL384400	Cover Assembly, PT		トランスカバーAss'y		09
*	15K	VL233400	Bushing	NB-19	ワンタッチブッシュ	1pc.	02
*	15L	EP600070	Bind Head Screw	3.0X8 ZMC2Y	+バインドSタイト	2pcs	01
*	16	V1785000	Cover, PRM		PRMカバー		
	17	--	MIDI Unit		MIDIユニット		
*	17A	VJ886100	Plate, MIDI Jack		MIDIジャック板	MIDI IN OUT	06
*	17B	VK836400	Circuit Board	MIDI	MIDIシート		07
*	17C	VK023700	Pan Head Tapping Screw	3.0X8 ZMC2BL	+ナベTP2種	2pcs	
	18	--	AC Unit		ACユニット		
*	18A	VJ930000	AC Plate		ACプレート	AC INLET	05
	18B	--	Inlet Wire	4P-200	インレット束線	AC IN-PRM_CN2	
	18Ba	CB069250	Cord Clamper	BK-1	束線止め	1pc.	01
	18Bb	LB202910	Connecter	PA-126-6.0	電源コネクタ		03
	18Bc	--	Wire	GY	ビニール線		
	18Bd	--	Wire	WH	ビニール線		
*	18Be	VE469200	Cover		プラグカバー	1pc.	
*	18C	EP600530	Bind Head Screw	3.0X8 ZMC2BL	+バインドSタイト	2pcs	01
*	19	VK748800	Circuit Board	ANG	ANGシート		18
*	20	VJ929900	PS Plate		PSプレート		05

*New Parts（新規部品）

ランク：Japan only

	Ref. No.	Part No.	Description		部品名	Remarks	ランク
*	21	VJ965700	Knee Lever Unit	BL	ニーレバーユニット		11
	22	CB046030	Support	LCBS-04T	基板サポート	4pcs	01
	23	--	Accessory Unit		アクセサリーユニット		
*	23A	VJ885900	Accessory Case		アクセサリーケース		06
* *	23B	VK749500	Circuit Board	AUX	AUXシート		10
* * *	23D	VJ660100	Circuit Board	HP	HPシート		13
* * *	23E	VK803800	Circuit Board	RA	RAシート		09
* * *	23F	VJ869400	Washer	BL	ワッシャー	3pcs	02
* * *	23G	VK963200	Nut	12X14X2 MFZN2BL	管用ナット	3pcs	
* * *	23H	VK023700	Pan Head Tapping Screw	3.0X8 ZMC2BL	+ナベTP2種	1pc.	
*	23I	VK963300	Pan Head Screw	3.0X8 MFZN2BL	+ナベSタイト	1pc.	
	24	CB002050	Rubber Button	BL	ゴムボタン	1pc.	01
*	25	VL444900	Arm Assembly	Left	腕木Ass'y(左)	J	07
* *	25	VJ954900	Arm Assembly	Left	腕木Ass'y(左)	U,C,H,D,B,A	10
* *	26	VL445000	Arm Assembly	Right	腕木Ass'y(右)	J	07
* *	26	VJ955000	Arm Assembly	Right	腕木Ass'y(右)	U,C,H,D,B,A	10
*	27	VD722700	Clip	SC-1115	シェルクリップ	4pcs	02
	28	--	Name Plate		銘板		
*	29	VK895700	Stay		ステー		06
*	31	VI693100	Bind Head Screw	4.0X8 ZMC2BL	+バインドSタイト	10pcs	01
	32	ED030066	Bind Head Screw	3.0X6 ZMC2Y	+バインドSタイト	32pcs	01
	33	VA835900	Trus Head Screw	4.0X16 ZMC2BL	+トラスSタイト	12pcs	01
	34	--	Trus Head Tapping Screw	4.0X12 ZMC2BL	+トラスTP1種	4pcs	
*	35	EN640020	Trus Head Tapping Screw	4.0X10 ZMC2Y	+トラスTP1種	4pcs	01
* *	36	EP030230	Bind Head Tapping Screw	3.5X10 ZMC2Y	+バインドTP1種	33pcs (J:31pcs)	01
*	37	VA835700	Bind Head Tapping Screw	4.0X16 ZMC2BL	+バインドPタイト	8pcs (J:16pcs)	01
	38	ED030146	Bind Head Screw	3.0X14 ZMC2Y	+バインド小ネジ	4pcs	01
	39	EC040106	Trus Head Screw	4.0X10 ZMC2Y	+トラス小ネジ	4pcs	01
	40	ED040146	Bind Head Screw	4.0X14 ZMC2Y	+バインド小ネジ	8pcs	01
*	41	EP040220	Bind Head Tapping Screw	4.0X25 ZMC2Y	+バインドTP1種	8pcs	01
* * *	42	EP600070	Bind Head Screw	3.0X8 ZMC2Y	+バインドSタイト	3pcs	01
* * *	62	VJ883100	Cable, SP	12P	SP束線	SM-PU_CN17,18	07
*	63	VJ881300	Cable, PKA	16P	PKA束線	DM-SM	08
	64	VI317500	Support		補強板	2pcs	01
	65	CB817510	Cord Clamper	S-14B	束線止め	2pcs	01
	66	CB070450	Cord Clamper	L=100	束線止め	20pcs	01
* *	67	VL383600	Cushion, DM Circuit Board	BL DM	シートクッション		07
*	69	VL659800	Side Ange,DM		DMサイドAss'y		08
	70	VF852500	Clamp	UL-13	クランプ	4pcs	02
	71	VB933800	Ferrite Core	BP53RB310190N0A	フェライトコア	3pcs	03
* *	72	VL644800	Ferrite Core	BP53RB280160N3M	フェライトコア	1pc.	03
*	73	EM030240	Flat Head Tapping Screw	3.0X10 ZMC2Y	+皿TP1種	4pcs	
	74	ED040066	Bind Head Screw	4.0X6 ZMC2Y	+バインドSタイト	8pcs	01
	75	EP030340	Bind Head Tapping Screw	3.5X12 ZMC2BL	+バインドTP1種	1pc.	01
*	FU1	VL504300	FU Unit		FUユニット	U,C	18
* * *	PA1	VJ964000	Power Amplifier Unit		電源アンプ	J,D,X,M,A,B	34
* * *	PA1	VJ961200	Power Amplifier Unit		電源アンプ	H	34
* * *	PA1	VK965800	Power Amplifier Unit		電源アンプ	C	34
* * *	PA1	VJ963900	Power Amplifier Unit		電源アンプ	U	34
*	PA2	VK397100	Cover, PU		PUカバー	U	12
		--	Earth Wire	L=80	アース線	1pc.	
		--	Connector Assembly	4P-500	KRD-KRD束線	DM_CN9-KNEE_CN1	
		--	Connector Assembly	4P-1050	VH-VH束線	DM_CN13-ANG_CN2	
		--	Connector Assembly	6P-300	KRD-KRD束線	DM_CN10-MIDI_C1	
		--	Connector Assembly	6P-350	KRD-KRD束線	PU_CN19-HP_CN1	
		--	Connector Assembly	9P-300	KRD-KRD束線	DM_CN11-MDR_CN1	
		--	Connector Assembly	9P-200	KRD-KRD束線	ANG_CN11-RA_CN1	
		--	Connector Assembly	10P-950	KRD-KRD束線	DM_CN14-ANG_C10	
		--	Connector Assembly	10P-250	KRD-KRD束線	ANG_CN4-AUX_CN3	
		--	Connector Assembly	10P-200	KRD-KRD束線	ANG_CN5-PU_CN15	
		--	Connector Assembly	2P-900	VH-VH束線	DM_CN12-PU_CN14	
		--	Connector Assembly	3P-200	VH-VH束線	ANG_CN6-PU_CN13	
		--	Connector Assembly	4P-900	FDD電源束線	ANG_CN7-FDD_CN1	
		--	Connector Assembly	2P-3P-550	VH-VH束線	DM_CN8-AUX_CN1	
		--	Connector Assembly	3P-150	KRD-KRD束線	DM_CN4-ANG_CN9	

*New Parts (新規部品)

ランク：Japan only

■ARM UNIT (LEFT/RIGHT)（腕木ユニット(左/右)）

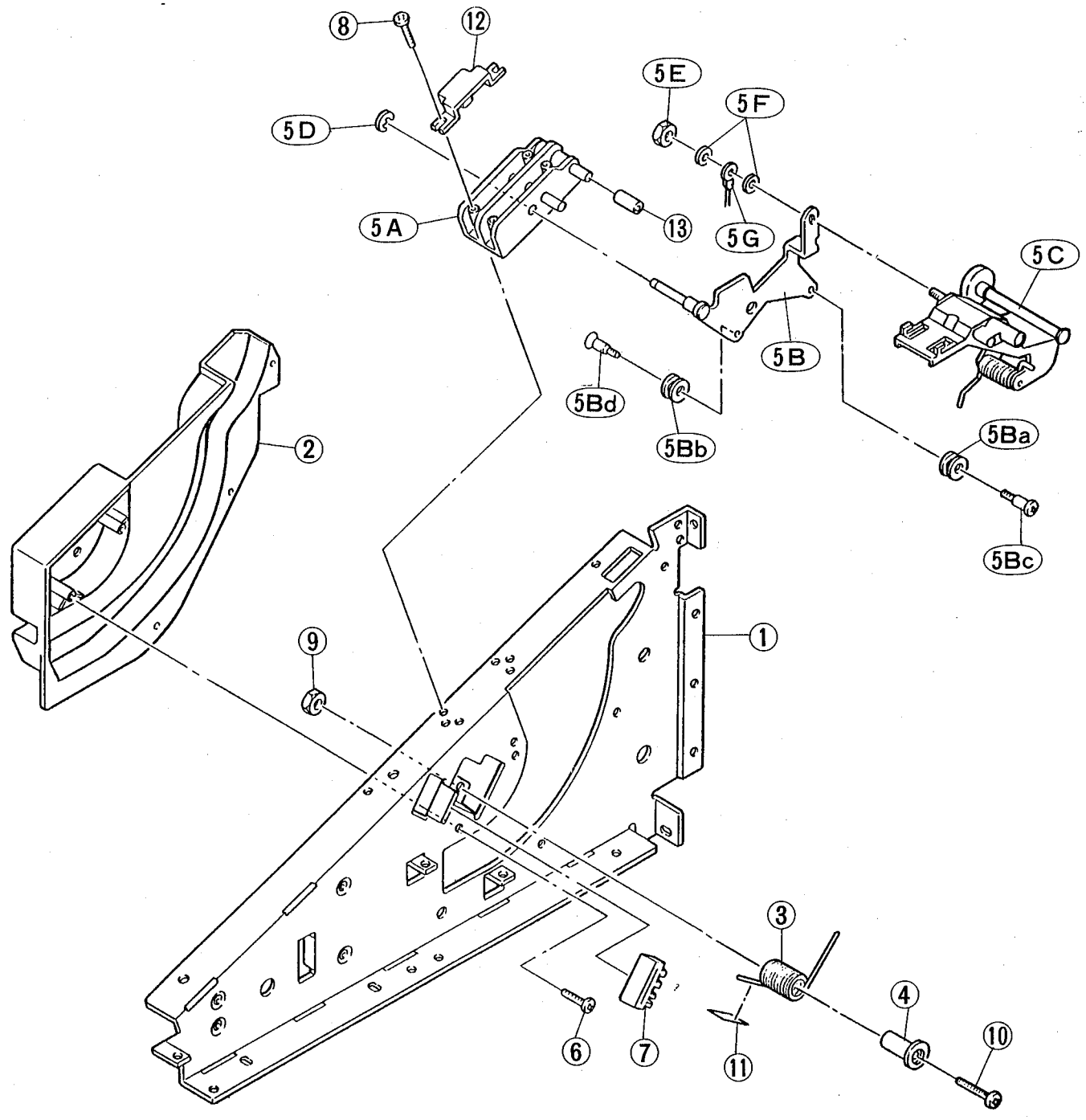

※The figure indicates the left arm unit.
図は、腕木ユニット(左)

	Ref. No.	Part No.	Description		部品名	Remarks	ランク
			<Arm Unit>	Left	<腕木ユニット(左)>	EL-70	
*	1	VJ507400	Angle, Arm	Left	腕木金具 (左)		
*	2	VL019200	Guide Assembly	Left	ガイドAss'y(左)		
*	3	VJ952900	Spring	Left	バネ (左)	1pc.	
*	4	VK962500	Shaft, Spring		バネ固定軸	1pc.	02
	5	--	Shaft Unit	Left	軸ユニット (左)		
*	5A	VJ879800	Shaft Holder	Left	軸受け (左)		05
*	5B	VJ953500	Lever Unit	Left	レバーユニット (左)		
*	5Ba	VJ804000	Pulley	(A)	プーリー (A)	1pc.	02
*	5Bb	VJ989000	Pulley	(B)	プーリー (B)	1pc.	02
*	5Bc	VJ954100	Screw	4.0X6	段付きネジ	1pc.	01
*	5Bd	VJ996700	Screw	4.0X6	段付き平小ネジ	1pc.	01
*	5C	VJ953700	Angle Unit, Cover	Left	蓋受け金具ユニット		
	5D	EV501506	Stop Ring	φ5.0	E形止め輪	1pc.	01
*	5E	VL034400	Hexagonal Nut	φ6.0 ZMC2BL	六角ナット	1pc.	
*	5F	VI240700	Flat Washer		平座金みがき丸	2pcs	01
	5G	--	Earth Wire	L=55	アース線		
*	6	VA847500	Bind Head Tapping Screw	4.0X14 ZMC2Y	+バインドPタイト	5pcs	01
*	7	VJ953400	Cushion	BL	クッション	1pc.	03
*	8	VD022800	Bind Head Screw	4.0X25 ZMC2Y	+バインドSタイト	4pcs	01
*	9	ES200170	Hexagonal Nut	φ6.0 ZMC2BL	六角ナット	1pc.	01
*	10	VK962600	Pan Head Screw	6.0X35 ZMC2Y	+ナベ小ネジ	1pc.	
*	11	VL397300	Plate		保護プレート	1pc.	
*	12	VL445300	Angle, Earth	Left	アース金具 (左)	1pc.	
*	13	VL670300	Tube	ESG-3	チューブ	1pc.	

*New Parts (新規部品)　　ランク：Japan only

	Ref. No.	Part No.	Description		部品名	Remarks	ランク
			<Arm Unit>	Right	<腕木ユニット(右)>	EL-70	
*	1	VJ507600	Angle, Arm	Right	腕木金具 (右)		
*	2	VL019300	Guide Assembly	Right	ガイドAss'y(右)		
*	3	VJ953000	Spring	Right	バネ (右)	1pc.	
*	4	VK962500	Shaft, Spring		バネ固定軸	1pc.	02
	5	--	Shaft Unit		軸ユニット (右)		
*	5A	VJ879900	Shaft Holder	Right	軸受け (右)		05
*	5B	VJ953600	Lever Unit	Right	レバーユニット (右)		
*	5Ba	VJ804000	Pulley	(A)	プーリー (A)	1pc.	02
*	5Bb	VJ989000	Pulley	(B)	プーリー (B)	1pc.	02
*	5Bc	VJ954100	Screw	4.0X6	段付きネジ	1pc.	01
*	5Bd	VJ996700	Screw	4.0X6	段付き平小ネジ	1pc.	01
*	5C	VJ953800	Angle Unit, Cover	Right	蓋受け金具ユニット		
	5D	EV501506	Stop Ring	φ5.0	E形止め輪	1pc.	01
*	5E	VL034400	Hexagonal Nut	φ6.0 ZMC2BL	六角ナット	1pc.	
*	5F	VI240700	Flat Washer		平座金みがき丸	2pcs	01
	5G	--	Earth Wire	L=55	アース線		
*	6	VA847500	Bind Head Tapping Screw	4.0X14 ZMC2Y	+バインドPタイト	5pcs	01
*	7	VJ953400	Cushion	BL	クッション	1pc.	03
*	8	VD022800	Bind Head Screw	4.0X25 ZMC2Y	+バインドSタイト	4pcs	01
*	9	ES200170	Hexagonal Nut	φ6.0 ZMC2BL	六角ナット	1pc.	01
*	10	VK962600	Pan Head Screw	6.0X35 ZMC2Y	+ナベ小ネジ	1pc.	
*	11	VL397300	Plate		保護プレート	1pc.	
*	12	VL445400	Angle, Earth	Right	アース金具 (右)	1pc.	
*	13	VL670300	Tube	ESG-3	チューブ	1pc.	

*New Parts (新規部品)　　ランク：Japan only

■ KNEE LEVER UNIT（ニーレバーユニット）

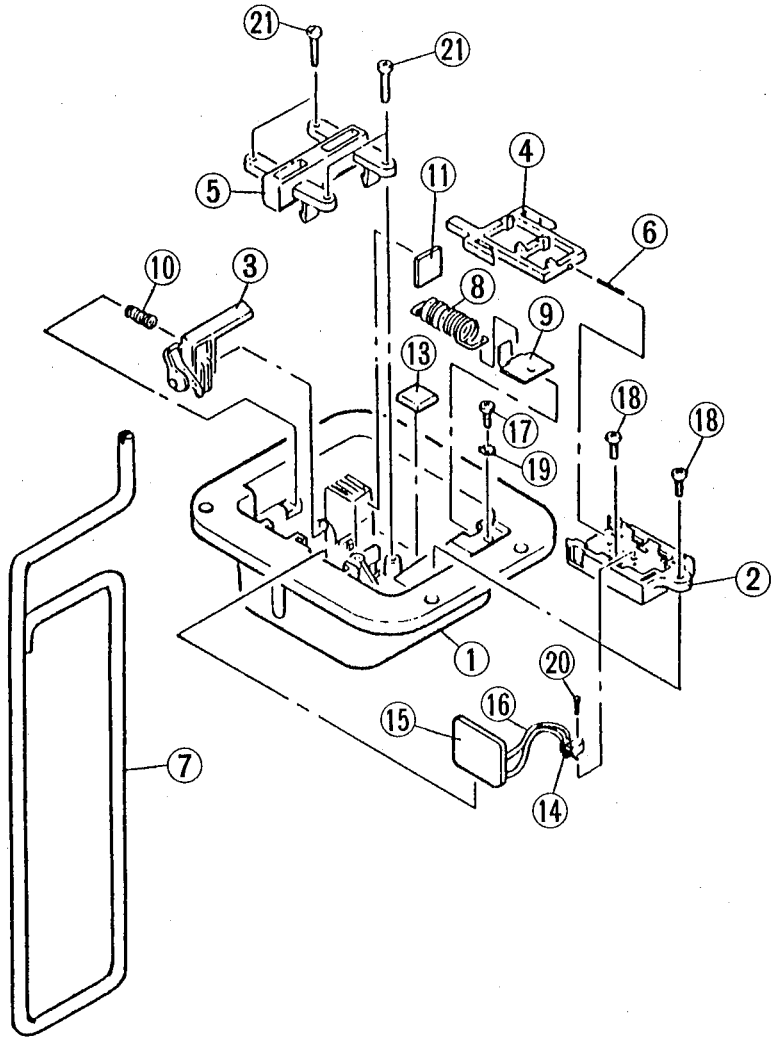

	Ref. No.	Part No.	Description		部品名	Remarks	ランク
*		VJ965700	<Knee Lever Unit>	BL	<ニーレバーユニット>	EL-70	11
	1	VC940300	Case	BL	ケース		03
	2	VB740200	Case Block	BL	ケースブロック		02
	3	VB445200	Actuator		アクチェータ		02
	4	VB445300	Actuator Switch		アクチェータスイッチ		01
	5	VB445400	Holder		レバー押さえ		02
	6	VB512500	Coil Spring		コイルバネ		01
	7	VB512700	Lever		レバー		07
	8	VB658300	Spring		スプリング		03
	9	AA046030	Hook		フック		01
	10	AA046050	Coil Spring		コイルスプリング		01
	11	VB513100	Felt	10X10X2 BL	フェルト		02
	13	VB513300	Bump-on	BL	バンポン		01
	14	VA228500	Micro Switch	SPPB13001A	マイクロスイッチ		01
*	15	VJ695800	Circuit Board	KNELEV	KNELEVシート		02
	16	--	Connector Assembly		束線		
	17	ED030066	Bind Head Screw	3.0X6 ZMC2Y	+バインド小ネジ	1pc.	01
	18	EP600280	Bind Head Tapping Screw	3.0X8 ZMC2Y	+バインドPタイト	2pcs	01
*	19	ET900010	Toothed Lock Washer	B3.0 ZMC2Y	歯付座金外歯形	1pc.	01
*	20	VA226000	Pan Head Tapping Screw	2.0X8 ZMC2BL	+ナベPタイト	1pc.	01
*	21	VB658700	Bind Head Tapping Screw	3.0X14 ZMC2Y	+バインドPタイト	4pcs	01

*New Parts（新規部品）

ランク：Japan only

■PEDAL UNIT（ペダルユニット）

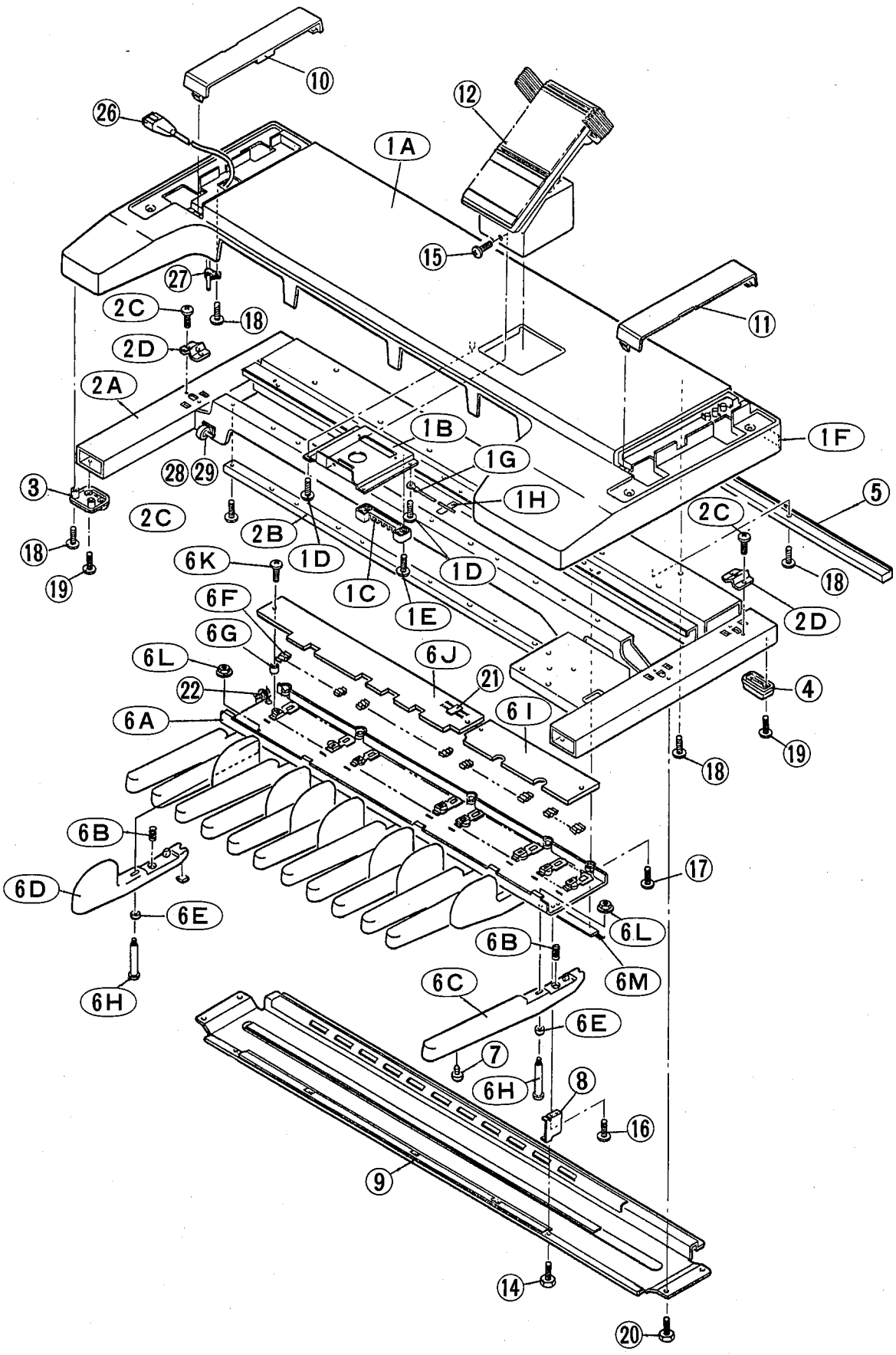

	Ref. No.	Part No.	Description		部品名	Remarks	ランク
			<Pedal Unit>		<ペダルユニット>	EL-70	
	1	--	PK Cover Assmbly	BL	ＰＫカバーＡss'y		
*	1A	VJ804500	PK Cover		ＰＫカバー	J,D,H,A,C,M,X,B	
*	1B	VJ842300	Holder, EXP	BL	ＥＸＰ取付板		06
*	1C	VJ804800	Block, EXP		ＥＸＰブロック		03
*	1D	VA847500	Bind Head Tapping Screw	4.0X14 ZMC2Y	＋バインドＰタイト	4pcs	01
	1E	ED040106	Bind Head Screw	4.0X10 ZMC2Y	＋バインドＳタイト	2pcs	01
	1F	--	Vibro-isolating Tape	1150×15×T0.5	防振テープ		
	1G	--	Earth Wire	L=170	アース線		
	1H	--	Adhesive Tape	12×50	粘着テープ		
	2	--	PK Frame Assembly	ZMC2Y	ＰＫフレームＡss'y		
	2A	--	PK Frame		ＰＫフレーム		
	2B	VC855500	Rail, Pedal Keyboard		ＰＫ取付レール		04
*	2C	EP600800	Bind Head Screw	4.0X8 ZMC2Y CE	＋バインドエバタイト	14pcs	01
*	2D	VJ914000	Angle Bracket, Side Board		側板固定アングル	4pcs	02
	3	VC998900	Foot, Front	BL	前スベリ座	2pcs	01
	4	VC998800	Foot, Rear	BL	後スベリ座	3pcs	01
*	5	VJ860000	Rail		スベリレール		08
*	6	VJ935200	Pedal Keyboard Assembly	M C20	ペダル鍵盤Ａss'y	J	41
*	6	VJ935300	Pedal Keyboard Assembly	M C20	ペダル鍵盤Ａss'y	U,C,H,D,B,A,X,M	28
	6A	VH534200	PK Frame	C20 2M	ＰＫフレーム		09
	6B	VH477200	Spring		バネ	20pcs	01
	6C	VH533500	White Key, Pedal	Dark GY	ペダル白鍵	12pcs(J)	05
	6C	VH533700	White Key, Pedal	Dark GY	ペダル白鍵	(U,C,H,D,B,A,X,M)	05
	6D	VH534100	Black Key, Pedal	BL	ペダル黒鍵	8pcs (J)	04
	6D	VH533900	Black Key, Pedal	BL	ペダル黒鍵	(U,C,H,D,B,A,X,M)	04
	6E	CB057810	Support Rubber	BL	支点ゴム	20pcs	01
	6F	CB057820	Rubber Contact	(A)	可動導電ゴム	20pcs	01
	6G	VH535500	Spacer		スペーサー	13pcs	01
	6H	VG457700	Screw	4.0 ZMC2Y	段付きねじ	20pcs	01
*	6I	VK806400	Circuit Board	PKH	ＰＫＨシート	J	12
*	6I	VJ661000	Circuit Board	PKH	ＰＫＨシート	U,C,H,D,B,A,X,M	07
*	6J	VK806200	Circuit Board	PKL	ＰＫＬシート	J	14
*	6J	VJ660800	Circuit Board	PKL	ＰＫＬシート	U,C,H,D,B,A,X,M	09
*	6K	VH553800	Bind Head Screw	3.0X12 ZMC2Y	＋バインドＳタイト	13pcs	01
	6L	VH534900	Hexagonal Nut	φ4.0 ZMC2Y	フランジ付六角ナット	20pcs	01
	6M	VB641400	PC Sensor	PK-20P	ＰＣセンサー		17
	7	VD087400	Key Stopper	BL	キーストッパー	12pcs(J)	01
	8	VH582100	Angle Bracket		取り付台	5pcs	01
*	9	VJ934800	PK Protector Assembly		ＰＫプロテクタAss'y		14
*	10	VK023800	Side Cover Assembly	Left BL	ｻｲﾄﾞｶﾊﾞｰ(左) Ass'y		
*	11	VK023900	Side Cover Assembly	Right BL	ｻｲﾄﾞｶﾊﾞｰ(右) Ass'y		
*	12	VJ941500	EXP Pedal	2CH	ＥＸＰペダル		17
	14	VH888500	Hex, S-Tyte Screw	3.0X6 ZMC2Y	＋六角Ｓタイト	5pcs	01
*	15	VA221600	Bind Head Screw	4.0X10 ZMC2BL	＋バインド小ネジ	1pcs	01
	16	ED030066	Bind Head Screw	3.0X6 ZMC2Y	＋バインドＳタイト	5pcs	01
*	17	VA835200	Bind Head Screw	4.0X20 ZMC2Y	＋バインドＳタイト	5pcs	01
*	18	VA847500	Bind Head Tapping Screw	4.0X14 ZMC2Y	＋バインドＰタイト	36pcs	01
	19	ED040106	Bind Head Screw	4.0X10 ZMC2Y	＋バインドＳタイト	8pcs	01
	20	EV300100	Hex, S-Tyte Screw	4.0X10 ZMC2Y	六角Ｓタイト	10pcs	01
	21	--	Adhesive Tape	12X50	粘着テープ	6pcs	
	22	CB069250	Cord Clamper	BK-1	束線止め	1pcs	01
*	26	VJ881500	Cable, PKB	16P	ＰＫＢ束線	SM-PKL_CN1	12
	27	CB000710	Nylon Clamp	NK-5N	ナイロンクランプ	1pc.	01
	28	VF852500	Clamp	UL-13	クランプ	1pc.	02
*	29	VL644800	Ferrite Core	BP53RB280160N3M	フェライトコア	1pc.	03
		--	Connector Assembly	6P-400	ＫＲＤ－ＫＲＤ束線	PKL_CN2-EXP-CN1	
		--	Connector Assembly	6P-300	ＫＲＤ－ＫＲＤ束線	PKH_CN5-EXP-CN1	
		--	Connector Assembly	10P-100	ＫＲＤ－ＫＲＤ束線	PKL_CN3-PKH_CN1	
		--	Wire	3P-600	ＰＣ束線	J	
		--	Wire	4P-250	ＰＣ束線	J	
		--	Connector Assembly	10P-200	ＫＲＤ－ＫＲＤ束線	PKL_CN2-PKH_CN3	
		--	Connector Assembly	9P-300	ＫＲＤ－ＫＲＤ束線	PKL_CN3-PKH_CN4	

*New Parts (新規部品)

ランク：Japan only

■EXPRESSION PEDAL（EXPペダル）

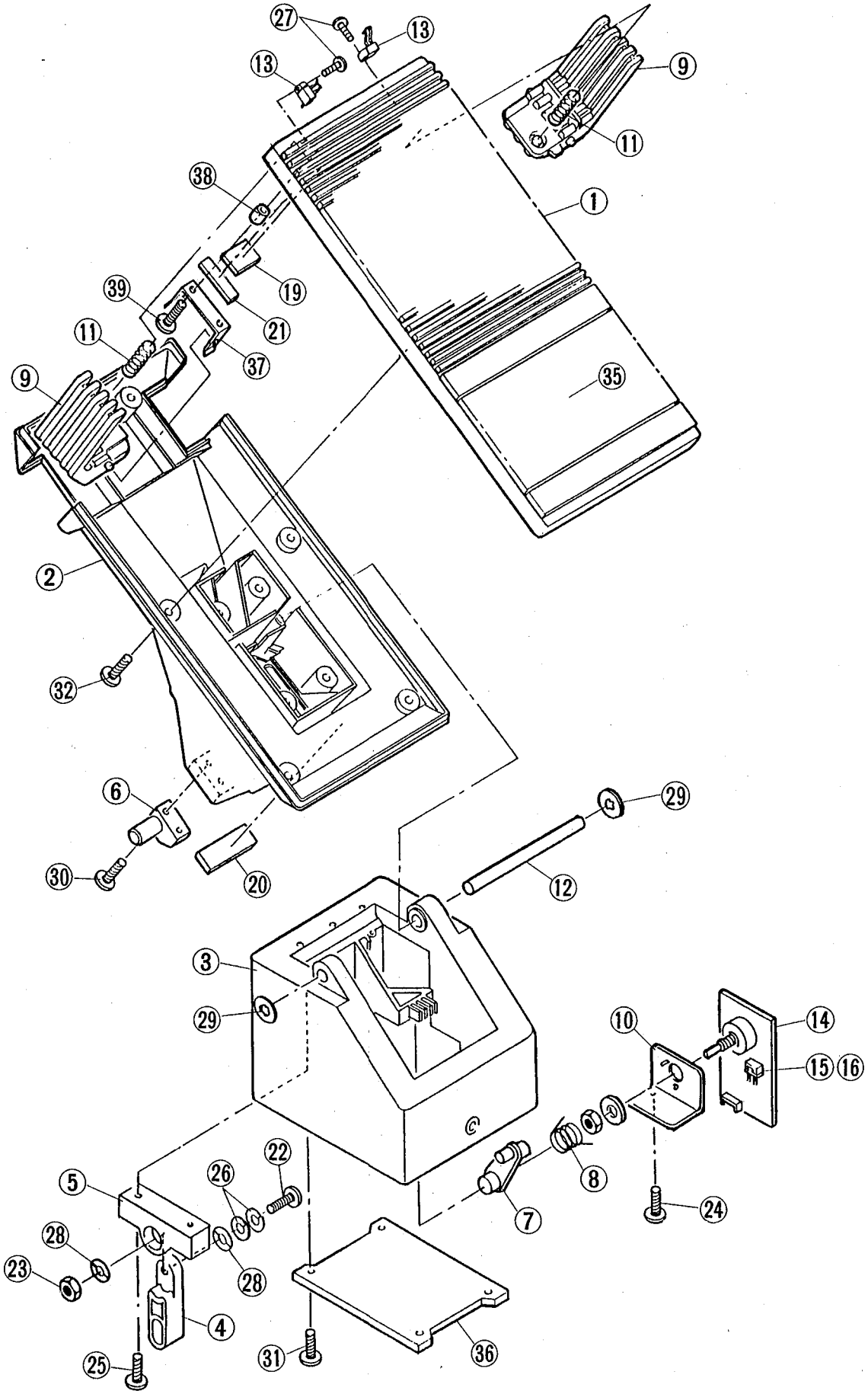

	Ref. No.	Part No.	Description		部品名	Remarks	ランク
*		VJ941500	<EXP Pedal>	2CH	<ＥＸＰペダル>	EL-70	17
* *	1	VJ465700	Pedal Plate	BL	踏板		07
* *	2	VJ465800	Cover, Pedal Plate	2CH BL	踏板カバー		07
*	3	VJ466100	Frame	BL	フレーム		07
	4	VB445500	Lever	(1)	トルクレバー（１）		02
*	5	VF614500	Lever	(2)	トルクレバー（２）		02
	6	VB445700	Block		ブロック		02
	7	VA227600	Actuator		アクチェータ		01
	8	VA228300	Coil Spring		ネジリコイルバネ		01
*	9	VJ465200	Lever	BL	レバー	2pcs	04
	10	VB511900	Plate		プレート		01
	11	VB512400	Coil Spring		コイルバネ	2pcs	01
*	12	VJ465000	Shaft		シャフト		02
	13	VA228500	Micro Switch	SPPB13001A	マイクロスイッチ	2pcs	01
*	14	VJ965100	Circuit Board	EXP	ＥＸＰシート		07
	15	VB304500	Connector Housing	PH 4P	コネクタハウジング		01
	16	VB936800	Contact	SPH-002T-P0.5S	コンタクト	4pcs	01
* *	19	VJ466300	Felt	17X12.5X1	フェルト	2pcs	
* *	20	VJ632200	Felt	32X12X2	フェルト	2pcs	
* *	21	VJ466200	Felt	25X6X1.5	フェルト	2pcs	
	22	EA050126	Pan Head Screw	5.0X12 ZMC2Y	＋ナベ小ネジ	1pc.	01
	23	EV100056	Hexagonal Nut	φ5.0 ZMC2Y	六角ナット	1pc.	01
* *	24	EP600290	Bind Head Tapping Screw	3.0X6 ZMC2Y	＋バインドＰタイト	1pc.	01
* *	25	EP640110	Bind Head Tapping Screw	4.0X12 ZMC2Y	＋バインドＰタイト	2pcs	01
	26	VC299400	Oval Spring Washer	2L 5.0	皿バネ座金	2pcs	01
*	27	VA226000	Pan Head Tapping Screw	2.0X8 ZMC2BL	＋ナベＰタイト	2pcs	01
	28	VA226400	Flat Washer	5X10X1 ZMC2Y	平座金みがき丸	2pcs	01
	29	VB514600	Ring	φ6.0	ＳＥ型リング	2pcs	01
*	30	VB658700	Bind Head Tapping Screw	3.0X14 ZMC2Y	＋バインドＰタイト	2pcs	01
* *	31	VB931600	Bind Head Tapping Screw	4.0X8 ZMC2BL	＋バインドＰタイト	4pcs	01
*	32	VC161100	Bind Head Tapping Screw	3.0X12 ZMC2BL	＋バインドＰタイト	10pcs	01
	35	VC116100	Pedal Mat	BL	踏板マット		05
* *	36	VK955200	Cover		カバー		02
* *	37	VK157200	Angle Bracket, Lever	SUS631-CSP-0	レバー取付金具	2pcs	03
	38	VB514400	Nut	φ3.0 SD-30-02	インサートナット	4pcs	01
*	39	EX000680	Pan Head Screw	3.0X5 SUS304	＋ナベ小ネジ	4pcs with SW	

*New Parts（新規部品）

ランク：Japan only

■ SPEAKER BOX UNIT（スピーカーボックスユニット）

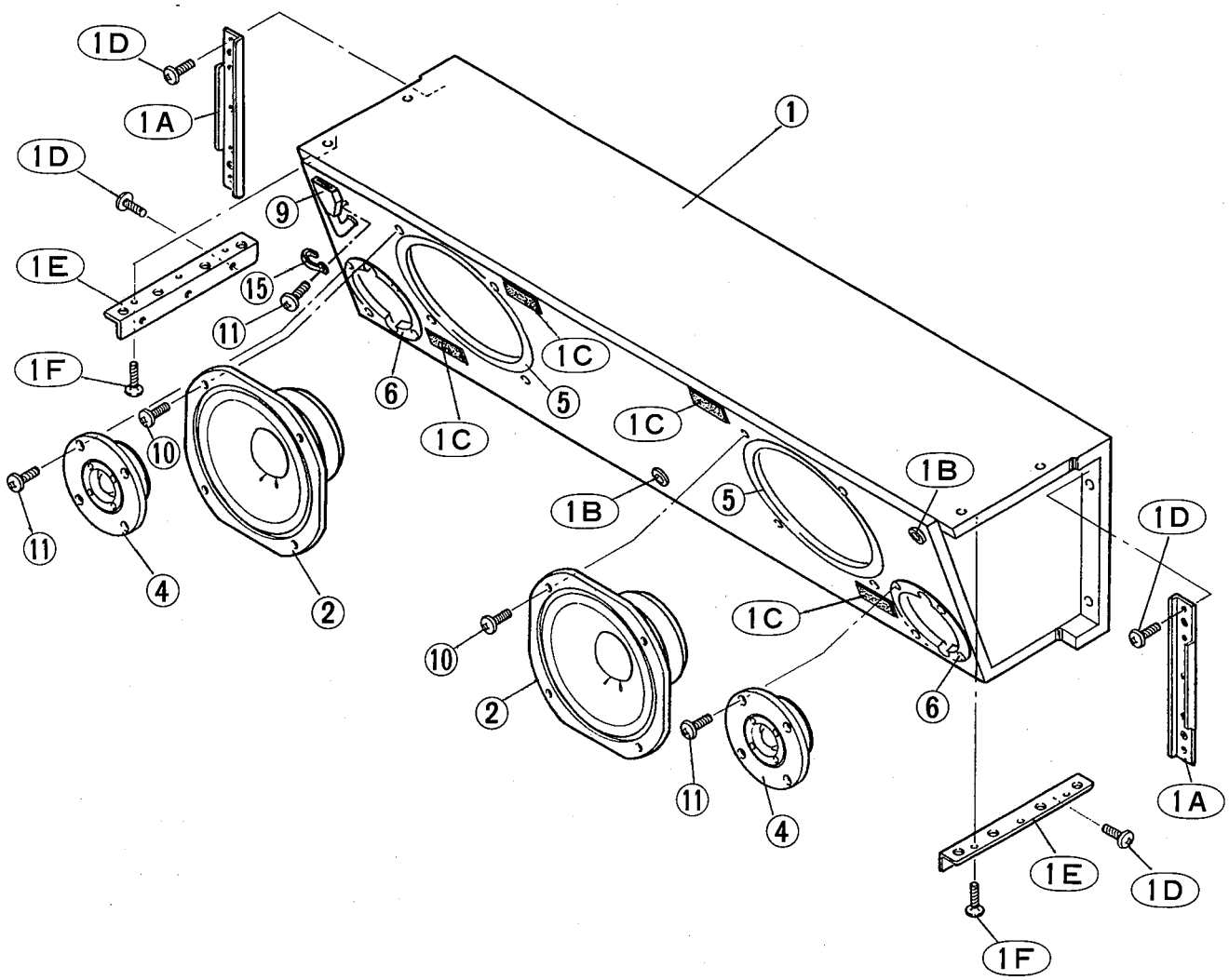

	Ref. No.	Part No.	Description		部品名	Remarks	ランク
			<Speaker Box Unit>		<ｽﾋﾟｰｶｰﾎﾞｯｸｽﾕﾆｯﾄ>	EL-70	
*	1	VJ932700	Speaker Box Assembly		ｽﾋﾟｰｶｰﾎﾞｯｸｽ Ass'y	J,D,H,A,C,M,X,B	
*	1A	VJ907600	Angle Bracket, Speaker Box		ＳＰ固定プレート	2pcs	03
	1B	CB074910	Latch		ラッチ	3pcs	01
*	1C	VJ933500	Dual Lock	BL	ベルクロ（メス）	4pcs	
*	1D	EP040230	Bind Head Tapping Screw	4.0X14 ZMC2Y	＋バインドＴＰ１種	16pcs	01
*	1E	VK843000	Angle		アングル	2pcs	05
*	1F	VH736500	Flat Head Tapping Screw	4.0X12 ZMC2Y	＋皿ＴＰ１種	6pcs	01
*	2	XJ227A00	Speaker	JA2130	スピーカー	Woofer	21
*	4	XI168A00	Speaker	2.5cm 8Ω 60W	スピーカー	Tweeter	
*	5	VJ933900	Packin'	GY	ペフ	2pcs	
	6	--	Packing		ＳＰ取り付パッキン	2pcs	
	9	--	Fasten	L=1m	ＳＭＲーファストン		
*	10	VB403600	Bind Head Screw	4.0X20 ZMC2BL	＋バインド小ネジ	8pcs	01
*	11	EP040250	Bind Head Tapping Screw	4.0X16 ZMC2BL	＋バインドＴＰ１種	9pcs	01
	15	CB817510	Cord Clamper	S-14B	束線止め		01

*New Parts（新規部品）

ランク：Japan only

■BENCH（椅子）

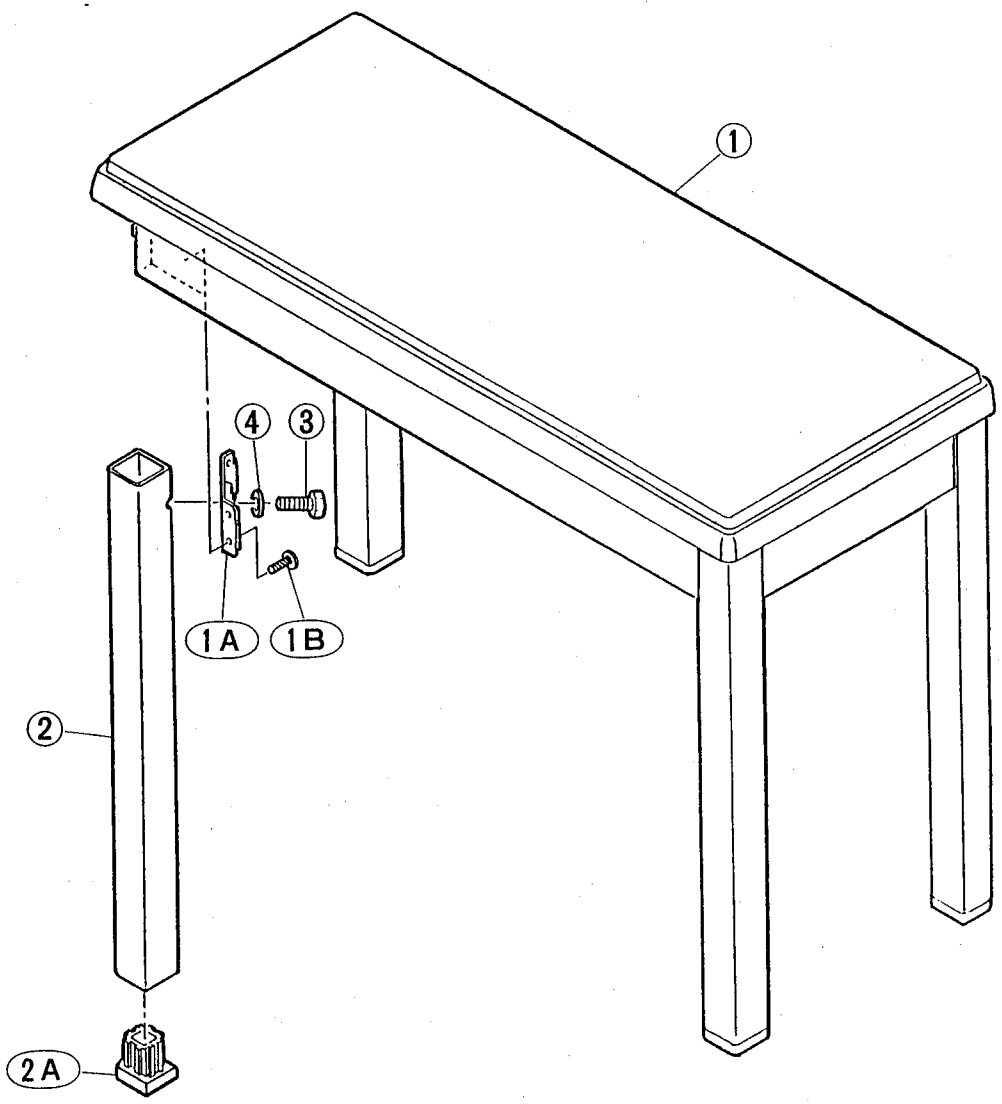

	Ref. No.	Part No.	Description		部品名	Remarks	ランク
			<Bench>		<椅子>	EL-70	
*	1	VK951500	Bench Board Assembly		座板Ass'y	J	
*	1	VK951300	Bench Board Assembly		座板Ass'y	X	
*	1	VK951800	Bench Board Assembly		座板Ass'y	B	
*	1	VK951400	Bench Board Assembly		座板Ass'y	C	
*	1	VK951700	Bench Board Assembly		座板Ass'y	U	
*	1A	VK958200	Angle Bracket		椅子コーナー金具	4pcs	03
*	1B	EP030170	Bind Head Tapping Screw	3.5X14 ZMC2Y	+バインドTP1種	1pc.	01
*	2	VK952000	Leg Pipe Assembly		脚柱Ass'y	J	10
*	2	VK951900	Leg Pipe Assembly		脚柱Ass'y	U,C,H,D,B,A,X,M	10
*	2A	VK957100	Cap		下キャップ	4pcs	02
	3	VA259300	Hexagonal Nut	10.0X45 ZMC2Y	六角ボルト（細目）	4pcs	01
	4	EX000230	Spring Washer	φ10.0 ZMC2Y	バネ座金	4pcs	

*New Parts（新規部品）

ランク：Japan only

■EL-90 BLOCK DIAGRAM

1450

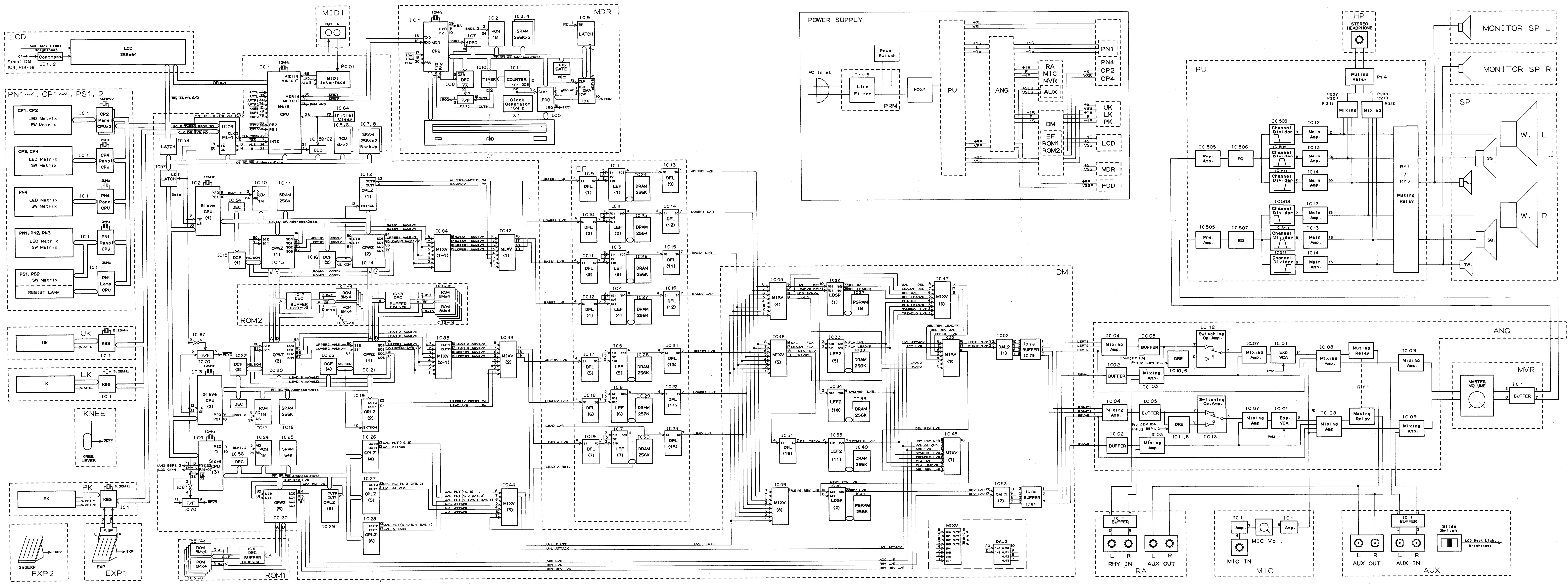

DIC / OPIC / DALIC

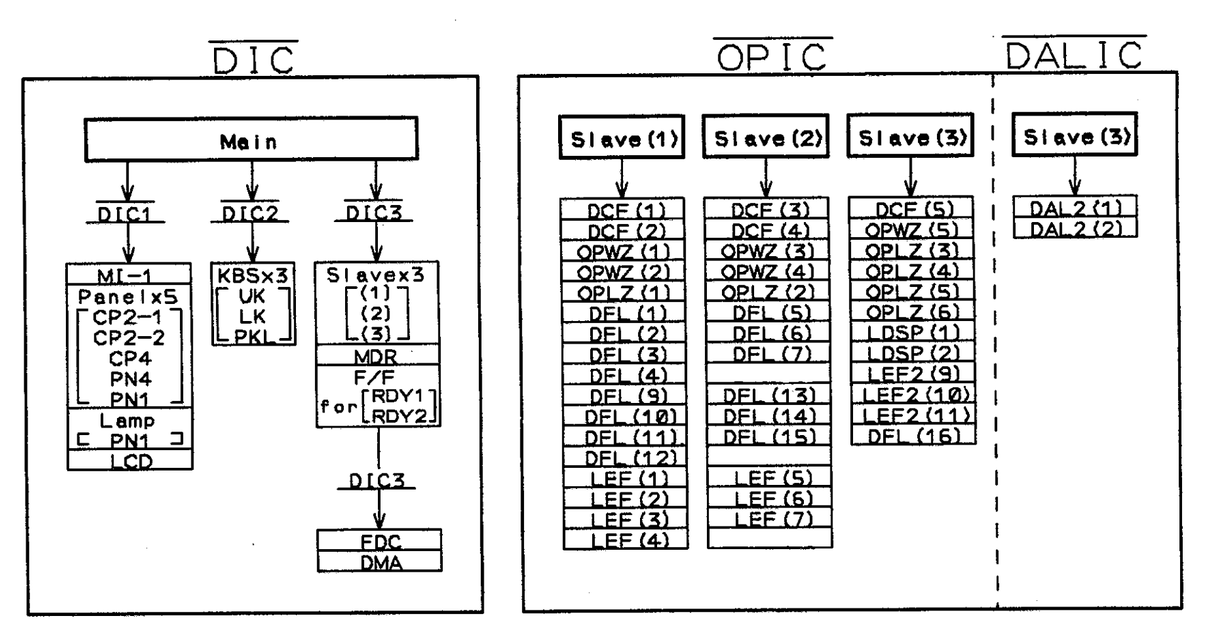

CLOCK

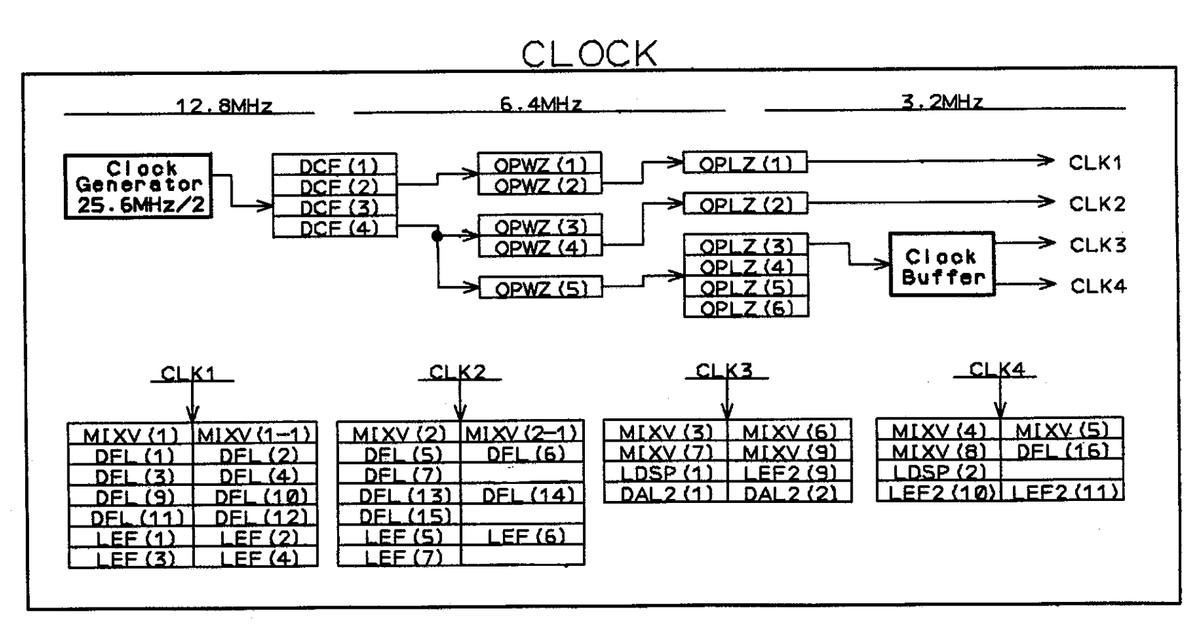

SYW

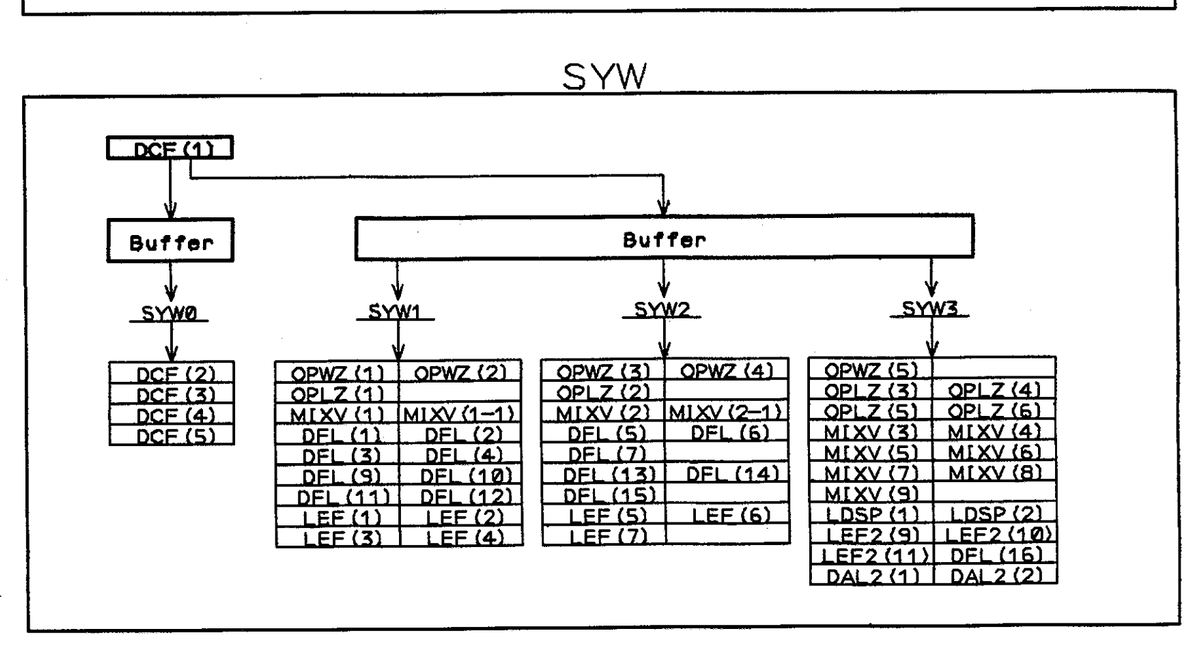

CD, CRS

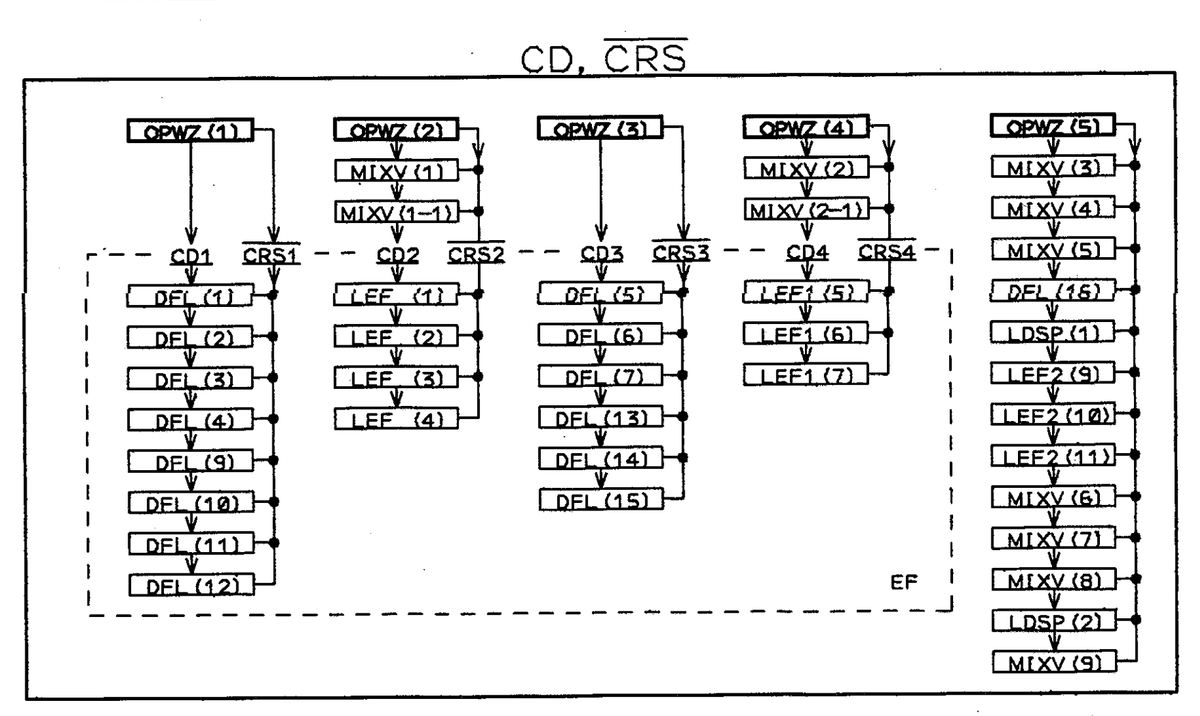

VOICE LSI Channel Map

	OPLZ (1) OPWZ·DCF (1) OPWZ·DCF (2)	OPLZ (2) OPWZ·DCF (3) OPWZ·DCF (4)	OPLZ (3) OPWZ	OPLZ (4)	OPLZ (5)	OPLZ (6)
CH 0					U ATTACK 4, 2 2/3, 2	
CH 1				U ATTACK 4, 2 2/3, 2		L ATTACK 4, 2 2/3, 2
CH 2			RHYTHM PERCUSSION (OPWZ·DCF 併用)		L ATTACK 4, 2 2/3, 2	
CH 3						
CH 4						
CH 5						
CH 6	UPPER/LOWER 1	UPPER/LOWER 2				
CH 7						
CH 8						
CH 9				U/L FLUTE 16, 8	U/L FLUTE 4, 2 2/3, 2	U/L FLUTE 5 1/3, 1 3/5, 1 CLICK
CH10			ACC			
CH11						
CH12						
CH13						
CH14	PEDAL 1	LEAD				
CH15	PEDAL 2					

EFFECT LSI Function

LEF (1)	LEF (2)	LEF (3)	LEF (4)	LEF (5)	LEF (6)	LEF (7)	
UPPER1	LOWER1	BASS1	BASS2	UPPER2	LOWER2	LEAD A	
Voicing Effect							
DFL (1)	DFL (2)	DFL (3)	DFL (4)	DFL (5)	DFL (6)	DFL (7)	
UPPER1	LOWER1	BASS1	BASS2	UPPER2	LOWER2	LEAD A	
Voicing Formant Filter							
DFL (9)	DFL (10)	DFL (11)	DFL (12)	DFL (13)	DFL (14)	DFL (15)	DFL (16)
UPPER1	LOWER1	BASS1	BASS2	UPPER2	LOWER2	LEAD	TREMOLO Filter
BRILLIANCE Filter							

	LDSP (1)		LEF2 (9)		LEF2 (10)	LEF2 (11)	LDSP (2)
CH 0	UPPER	DELAY	UPPER	FLANGER	SYMPHONIC	TREMOLO	REVERB
CH 1	LOWER		LOWER				
CH 2	LEAD		LEAD				
CH 3	PEDAL		PEDAL				

MIXV Function

MIXV (1−1) / MIXV (2−1) / MIXV (1) / MIXV (2)
Voicing Pan Set
FM·AWM Mixing → 音群信号

MIXV (3)
FLUTE FEET Mixing → FLUTE
ATTACK FEET Mixing → ATTACK
LEAD A·B Mixing → LEAD

MIXV (4) / MIXV (5)
→ U·L·LEAD·P DELAY Source
Voice Signal → SYMPHONIC Source
FLUTE → LEFT 1·2
Mixing → U·L·LEAD·P FLANGER Source
PAN Set
→ TREMOLO Source
→ RIGHT1·2

MIXV (6)
U·L·LEAD·P
Direct·Delay Mixing → DELAY
U·L·LEAD·P FLANGER, SYMPHONIC, TREMOLO Mixing → EFFECT

MIXV (7) / MIXV (8)
音群信号
FLUTE
RHYTHM REVERB Source
ATTACK
ACC Mixing → REVERB Source 1·2
U·L·LEAD·P FLANGER
SYMPHONIC
TREMOLO
DELAY

MIXV (9)
ATTACK
ACC
EFFECT → LEFT 1·2
U·L·LEAD·P DELAY → RIGHT1·2
LEFT 1·2 → DELAY REVERB Source
RIGHT1·2
Mixing

• LSI on the DM and EF circuit boards （LSI 配置図）

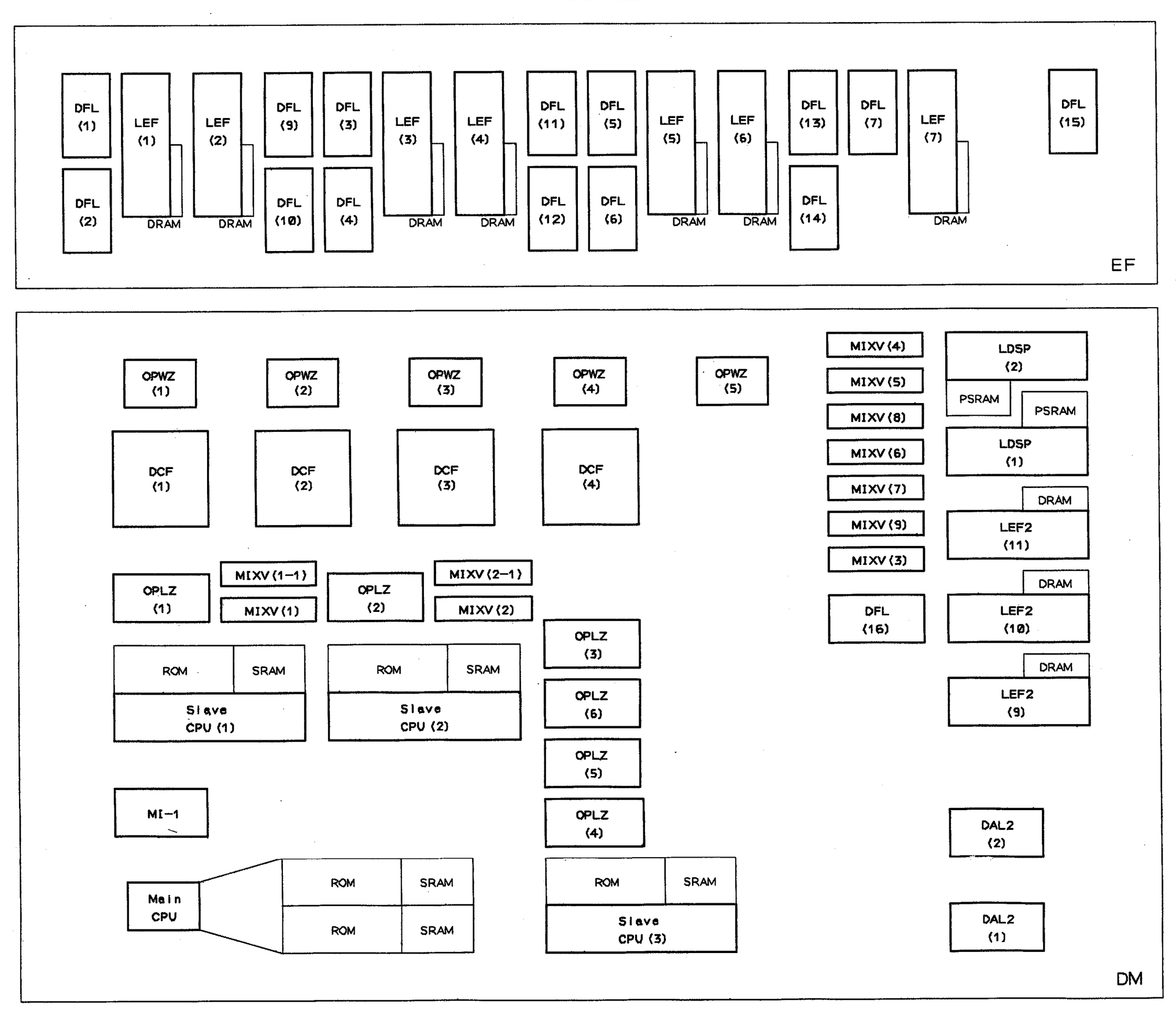

• Circuit bood Layout （ユニット 配置図）

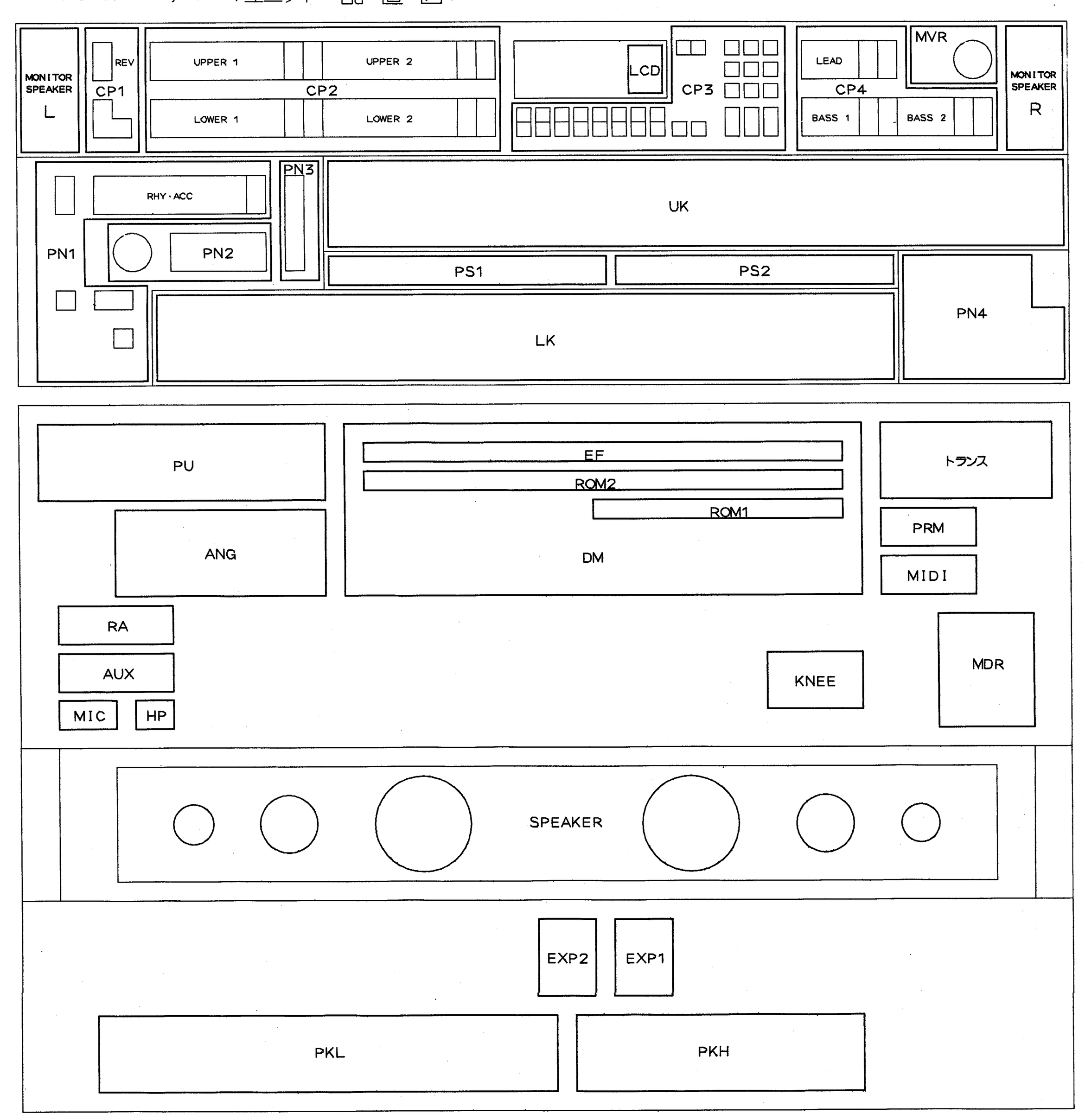

CP 1

LED NO.	SW NO.	NAME
REVERB		
L401	←	MAX
L402	←	6
L403	←	5
L404	←	4
L405	←	3
L406	←	2
L407	←	MIN
SUSTAIN		
L408	←	UPPER (KNEE)
L409	←	LOWER (KNEE)
L410	←	PEDAL

CP 2

LED NO.	SW NO.	NAME
UPPER KEYBORD VOICE 1		
L501	←	STRINGS
L502	←	ORGAN
L503	←	BRASS
L504	←	PIANO
L505	←	CLARINET
L506	←	GUITAR
L507	←	SAXOPHONE
L508	←	VIBRAPHONE
L509	←	CHORUS
L510	←	COSMIC
L511	←	HARMONICA
L512	←	TUTTI
L513	←	[1]
L514	←	[2]
L515	←	BRILLIANCE MAX
L516	←	6
L517	←	5
L518	←	4
L519	←	3
L520	←	2
L521	←	MELLOW
L522	←	VOLUME MAX
L523	←	6
L524	←	5
L525	←	4
L526	←	3
L527	←	2
L528	←	MIN
LOWER KEYBORD VOICE 1		
L529	←	STRINGS
L530	←	ORGAN
L531	←	BRASS
L532	←	PIANO
L533	←	CLARINET
L534	←	GUITAR
L535	←	SAXOPHONE
L536	←	VIBRAPHONE
L537	←	CHORUS
L538	←	COSMIC
L539	←	HORN
L540	←	TUTTI
L541	←	[1]
L542	←	[2]
L543	←	BRILLIANCE MAX
L544	←	6
L545	←	5
L546	←	4
L547	←	3
L548	←	2
L549	←	MELLOW
L550	←	VOLUME MAX
L551	←	6
L552	←	5
L553	←	4
L554	←	3
L555	←	2
L556	←	MIN
UPPER KEYBORD VOICE 2		
L557	←	STRINGS

LED NO.	SW NO.	NAME
L558	←	ORGAN
L559	←	BRASS
L560	←	PIANO
L561	←	CLARINET
L562	←	GUITAR
L563	←	SAXOPHONE
L564	←	VIBRAPHONE
L565	←	CHORUS
L566	←	COSMIC
L567	←	HARMONICA
L568	←	TUTTI
L569	←	[1]
L570	←	[2]
L571	←	BRILLIANCE MAX
L572	←	6
L573	←	5
L574	←	4
L575	←	3
L576	←	2
L577	←	MELLOW
L578	←	VOLUME MAX
L579	←	6
L580	←	5
L581	←	4
L582	←	3
L583	←	2
L584	←	MIN
LOWER KEYBORD VOICE 1		
L585	←	STRINGS
L586	←	ORGAN
L587	←	BRASS
L588	←	PIANO
L589	←	CLARINET
L590	←	GUITAR
L591	←	SAXOPHONE
L592	←	VIBRAPHONE
L593	←	CHORUS
L594	←	COSMIC
L595	←	HORN
L596	←	TUTTI
L597	←	[1]
L598	←	[2]
L599	←	BRILLIANCE MAX
L600	←	6
L601	←	5
L602	←	4
L603	←	3
L604	←	2
L605	←	MELLOW
L606	←	VOLUME MAX
L607	←	6
L608	←	5
L609	←	4
L610	←	3
L611	←	2
L612	←	MIN

CP 3

LED NO.	SW NO.	NAME
WINDOW SELECT		
L701	←	VOICE DISPLAY
L702	←	EFFECT SET
L703	←	A.B.C. M.O.C.
L704	←	FOOT SW
L705	←	REGIST SHIFT
L706	←	EXP. PITCH/MIDI
L707	←	VOICE EDIT
		RHYTHM PROGRAM
L708	←	PATTERN
L709	←	SEQUENCE
L710	←	U.FLUTE VOICE
L711	←	L.FLUTE VOICE
L712	←	TREMOLO/CHORUS
PAGE		
	S713	(L) 注1
	S714	(R) 注1
DATA CONTROL		
L715	←	HOLD
L716	←	COARSE
	S717	L.8 注1
	S718	L.7 注1
	S719	L.6 注1
	S720	L.5 注1
	S721	L.4 注1
	S722	L.3 注1
	S723	L.2 注1
	S724	L.1 注1
	S725	U.8 注1
	S726	U.7 注1
	S727	U.6 注1
	S728	U.5 注1
	S729	U.4 注1
	S730	U.3 注1
	S731	U.2 注1
	S732	U.1 注1

CP 4

LED NO.	SW NO.	NAME
LEAD VOICE		
L801	←	VIOLIN
L802	←	OBOE
L803	←	FLUTE
L804	←	TRUMPET
L805	←	[1]
L806	←	TO LOWER
L807	←	BRILLIANCE MAX
L808	←	6
L809	←	5
L810	←	4
L811	←	3
L812	←	2
L813	←	MELLOW
L814	←	VOLUME MAX
L815	←	6
L816	←	5
L817	←	4
L818	←	3
L819	←	2
L820	←	MIN
PEDAL VOICE 1		
L821	←	CONTRA BASS
L822	←	ORGAN BASS
L823	←	ELEC. BASS
L824	←	TUBA
L825	←	[1]
L826	←	TO LOWER
L827	←	BRILLIANCE MAX
L828	←	6
L829	←	5
L830	←	4
L831	←	3
L832	←	2
L833	←	MELLOW
L834	←	VOLUME MAX
L835	←	6
L836	←	5
L837	←	4
L838	←	3
L839	←	2
L840	←	MIN
PEDAL VOICE 2		
L841	←	CONTRA BASS
L842	←	ORGAN BASS
L843	←	ELEC. BASS
L844	←	TUBA
L845	←	[1]
L846	←	TO LOWER
L847	←	BRILLIANCE MAX
L848	←	6
L849	←	5
L850	←	4
L851	←	3
L852	←	2
L853	←	MELLOW
L854	←	VOLUME MAX
L855	←	6
L856	←	5
L857	←	4

EL-90 only

LED NO.	SW NO.	NAME
L858	←	3
L859	←	2
L860	←	MIN

EL-90 only

PN 1

LED NO.	SW NO.	NAME
KEYBORD PERCUSSION		
L101	←	LOWER
L102	←	PEDAL
RHYTHM		
L103	←	SEQ. [1]
L104	←	SEQ. [3]
L105	←	SEQ. [2]
L106	←	SEQ. [4]
L107	←	MARCH·USER1
L108	←	TANGO·USER5
L109	←	WALTZ·USER2
L110	←	LATIN1·USER6
L111	←	SWING·USER3
L112	←	LATIN2·USER7
L113	←	BOUNCE·USER4
L114	←	8 BEAT·USER8
L115	←	SLOW ROCK·A
L116	←	16 BEAT·C
L117	←	[1]·B
L118	←	[2]·D
L119	←	VOLUME MAX
L120	←	6
L121	←	5
L122	←	4
L123	←	3
L124	←	2
L125	←	MIN
L126	←	INTRO. ENDING
L127	←	SYNCHRO START
L128	←	START
L129	←	FILL IN

PN 3

LED NO.	SW NO.	NAME
BASIC. REGIST		
L201	←	1
L202	←	2
L203	←	3
L204	←	4
L205	←	5

PN 4

LED NO.	SW NO.	NAME
MUSIC DISK RECORDER		
L301	←	SHIFT
L302	←	PLAY CONTROL
L303	←	PEDAL
L304	←	LOWER
L305	←	UPPER
L306	←	RECORD CONTROL
L307	←	PEDAL
L308	←	LOWER
L309	←	UPPER
L310	←	CUSTOM PLAY
L311	←	RECORD(greenLED)
L312		RECORD (red LED)
	S313	SONG SELECT +
	S314	SONG SELECT −
L315	←	PLAY
L316	←	STOP
L317	←	PAUSE

• CP3

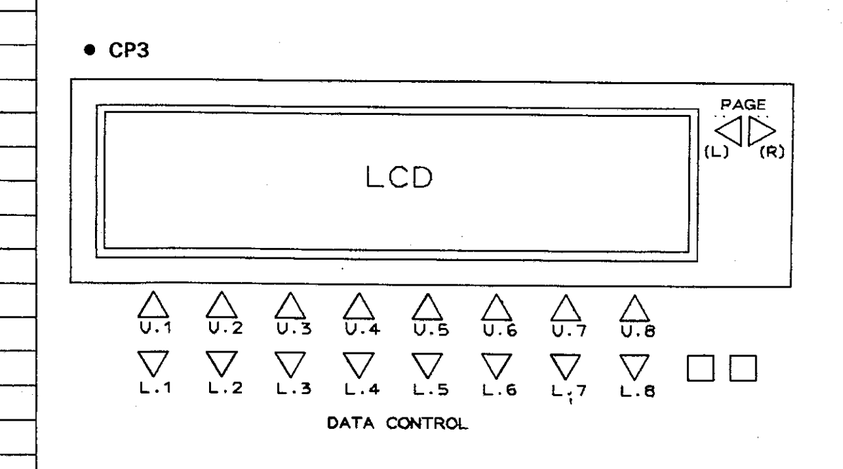

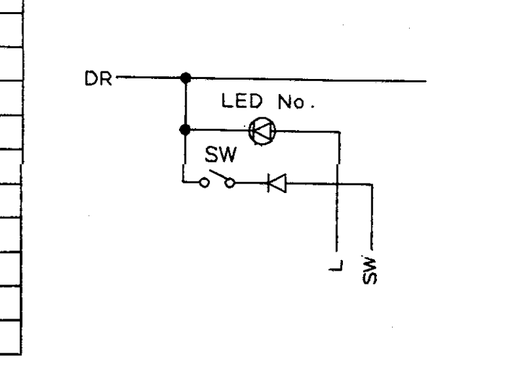

MDR DISPLAY MATRIX TABLE (PN4)

ライン名	L1	L2	L3	L4	L5	L6	L7	L8
DR1		1g	1f	1e	1d	1c	1b	1a
DR2		2g	2f	2e	2d	2c	2b	2a
DR3	UPPER COLON	3g	3f	3e	3d	3c	3b	3a
DR4	LOWER COLON	4g	4f	4e	4d	4c	4b	4a

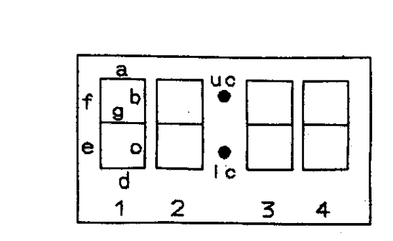

EL-90

■EL-90 CIRCUIT BOARD WIRING（EL-90ユニット配線図）

1450

MONITOR SPEAKER L
MONITOR SPEAKER R
CP1
CP2
LCD
LCD UNIT
CP3
CP4
MVR
PN1
PN2
PN3
PN4
MK
AFTER TOUCH SENSOR
PS1
PS2
PU
EF
ROM1
ROM2
POWER TRANSFORMER
PRIMARY
SECONDARY
PRM
AC IN
POWER SWITCH
MIDI
ANG
DM
RA
AUX
MIC
HP
KNEE
MDR
FDD UNIT
SPEAKER BOX
PKL
EXP1
EXP2
AFTER TOUCH SENSOR
AFTER TOUCH SENSOR

■EL-90 OVERALL CIRCUIT DIAGRAM 1/5 (DM, MIDI)

1450

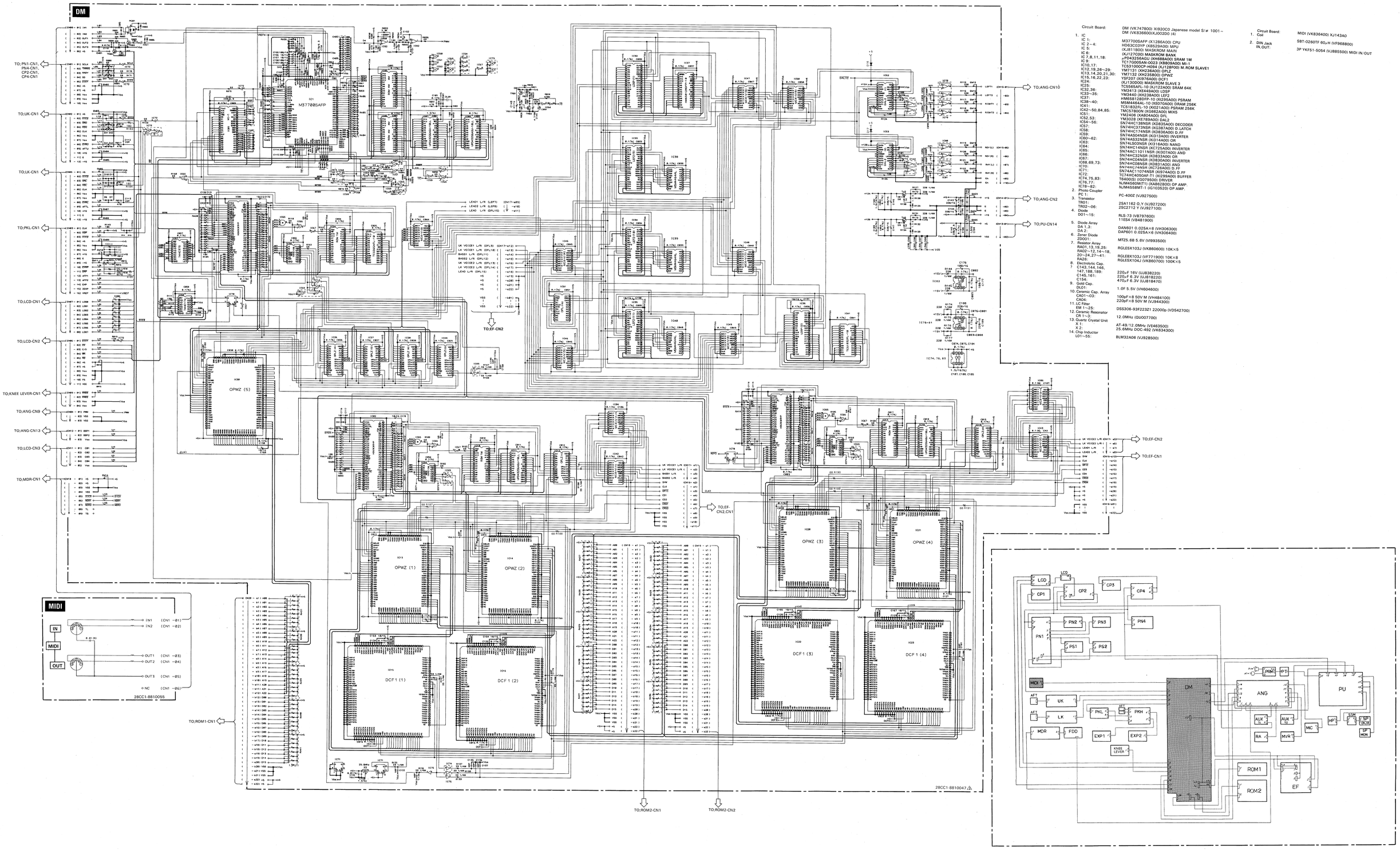

Circuit Board: DM (VK747800) XI920C0 Japanese model S/# 1001 ~ DM (VK836600)XJ002D0 (4)

1. IC
   - IC 1: M37700SAFP (X1286A00) CPU
   - IC 2~4: HD63C03YP (XB523A00) MPU
   - IC 5: (XJ811B00) MASKROM MAIN
   - IC 6: (XJ127C00) MASKROM BANK
   - IC 7,8,11,18: μPD43256AGU (XH688A00) SRAM 1M
   - IC 9: TC17G005AN-0023 (XB809A00) MI-1
   - IC10,17: TC531000CP-H094 (XJ128F00) M.ROM SLAVE1
   - IC12,19,26~29: YM7131 (XH236A00) OPL2
   - IC13,14,20,21,30: YM7132 (XH235B00) OPWZ
   - IC15,16,22,23: YSF207 (XI976A00) DCF1
   - IC24: (XJ130D00) MASKROM SLAVE 3
   - IC25: TC5565AFL-10 (XJ122A00) SRAM 64K
   - IC32,36: YM3413 (XE449A00) LDSP
   - IC33~35: YM3440 (XH238A00) LEF2
   - IC37: HM658128DFP-10 (XI295A00) PSRAM
   - IC38~40: MSM4464AL-10 (XE070A00) DRAM 256K
   - IC41: TC51832FL-10 (X0021A00) PSRAM 256K
   - IC42~50,84,85: TMC57800N (XG662A00) MIX5
   - IC51: YM2406 (XA804A00) DFL
   - IC52,53: YM3028 (XE789A00) DAL2
   - IC54~56: SN74HC138NSR (XD835A00) DECODER
   - IC57: SN74HC373NSR (XG387A00) D.LATCH
   - IC58: SN74HC174NSR (XD836A00) D.FF
   - IC59: SN74AS04NSR (XI313A00) INVERTER
   - IC60~62: SN74AS32NSR (XI314A00) OR
   - IC63: SN74LS03NSR (XI316A00) NAND
   - IC64: SN74HC14NSR (XC725A00) INVERTER
   - IC65: SN74AC11011NSR (XI307A00) AND
   - IC66: SN74HC32NSR (XD833A00) OR
   - IC67: SN74HC04NSR (XD830A00) INVERTER
   - IC68,69,73: SN74HC08NSR (XD831A00) AND
   - IC70: SN74HC74NSR (XC726A00) D.FF
   - IC71: SN74AC11074NSR (XI974A00) D.FF
   - IC72: TC74HC4050AF-T1 (XI299A00) BUFFER
   - IC74,75,83: T6400(S) (I007950) DRIVER
   - IC76,77: NJM4560MT(1) (XA862B00) OP AMP.
   - IC78~82: NJM4558MT-1 (IG103520) OP AMP.
2. Photo Coupler
   - PC 1: PC-400Z (VJ927500)
3. Transistor
   - TR01: 2SA1162 O,Y (VJ927200)
   - TR02~06: 2SC2712 Y (VJ927100)
4. Diode
   - D01~15: RLS-73 (VB797600)
   - 11ES4 (VB481900)
5. Diode Array
   - DA 1,3: DAN601 0.025A×6 (VH306300)
   - DA 2: DAP601 0.025A×6 (VH306400)
6. Zener Diode
   - ZD001: MTZ5.6B 5.6V (VI993500)
7. Resistor Array
   - RA01,13,19,25: RGLE5X103J (VK860600) 10K×5
   - RA02~12,14~18, 20~24,27~41: RGLE5X103J (VF771900) 10K×8
   - RA26: RGLE5X104J (VK860700) 100K×5
8. Electrolytic Cap.
   - C143,144,146, 147,188,189: 220μF 16V (UJ838220)
   - C145,161: 220μF 6.3V (UJ818220)
   - C154: 470μF 6.3V (UJ818470)
9. Gold Cap.
   - DL01: 1.0F 5.5V (VH604600)
10. Ceramic Cap. Array
    - CA01~03: 100pF×8 50V M (VH484100)
    - CA04: 220pF×8 50V M (VJ944300)
11. LC Filter
    - EM 1~25: DSS306-93F223Z1 22000p (VD542700)
12. Ceramic Resonator
    - CR 1~3: 12.0MHz (QU007700)
13. Quartz Crystal Unit
    - X 1: AT-49/12.0MHz (VE463500)
    - X 2: 25.6MHz DOC-492 (VK634300)
14. Chip Inductor
    - L01~55: BLM32A06 (VJ928500)

Circuit Board: MIDI (VK836400) XJ143A0

1. Coil: S8T-0260TF 60μH (VF968800)
2. DIN Jack IN, OUT: 3P YKF51-5054 (VJ885500) MIDI IN/OUT

■EL-90 OVERALL CIRCUIT DIAGRAM 2/5 (ROM1, ROM2, EF)

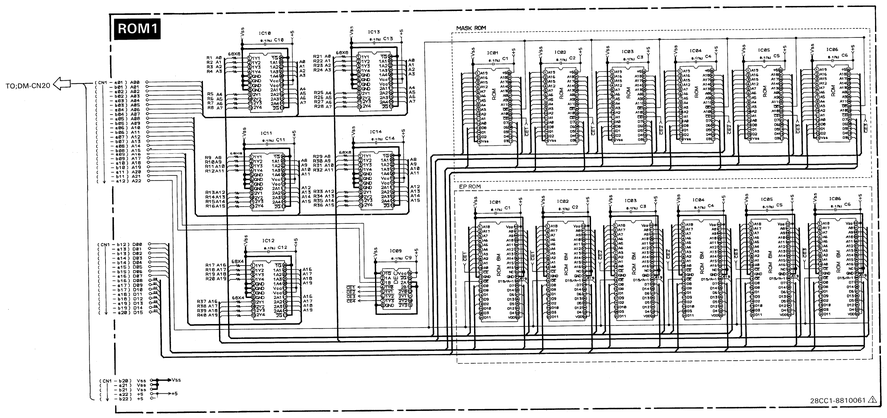

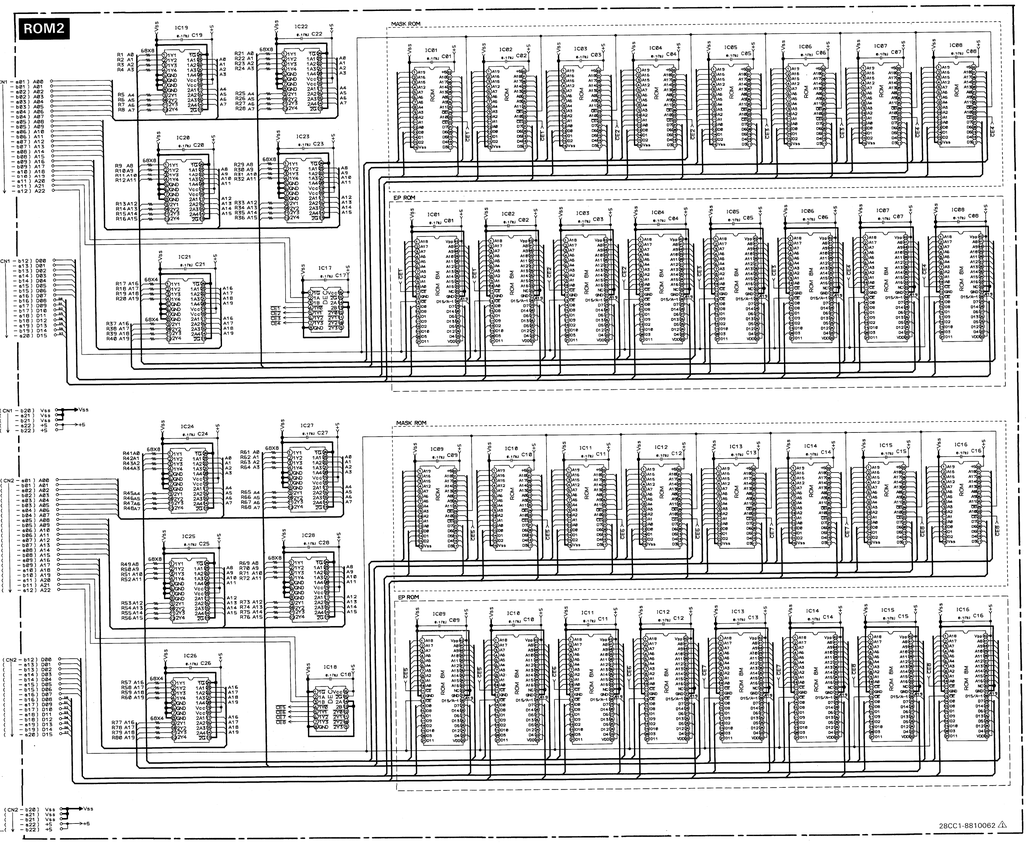

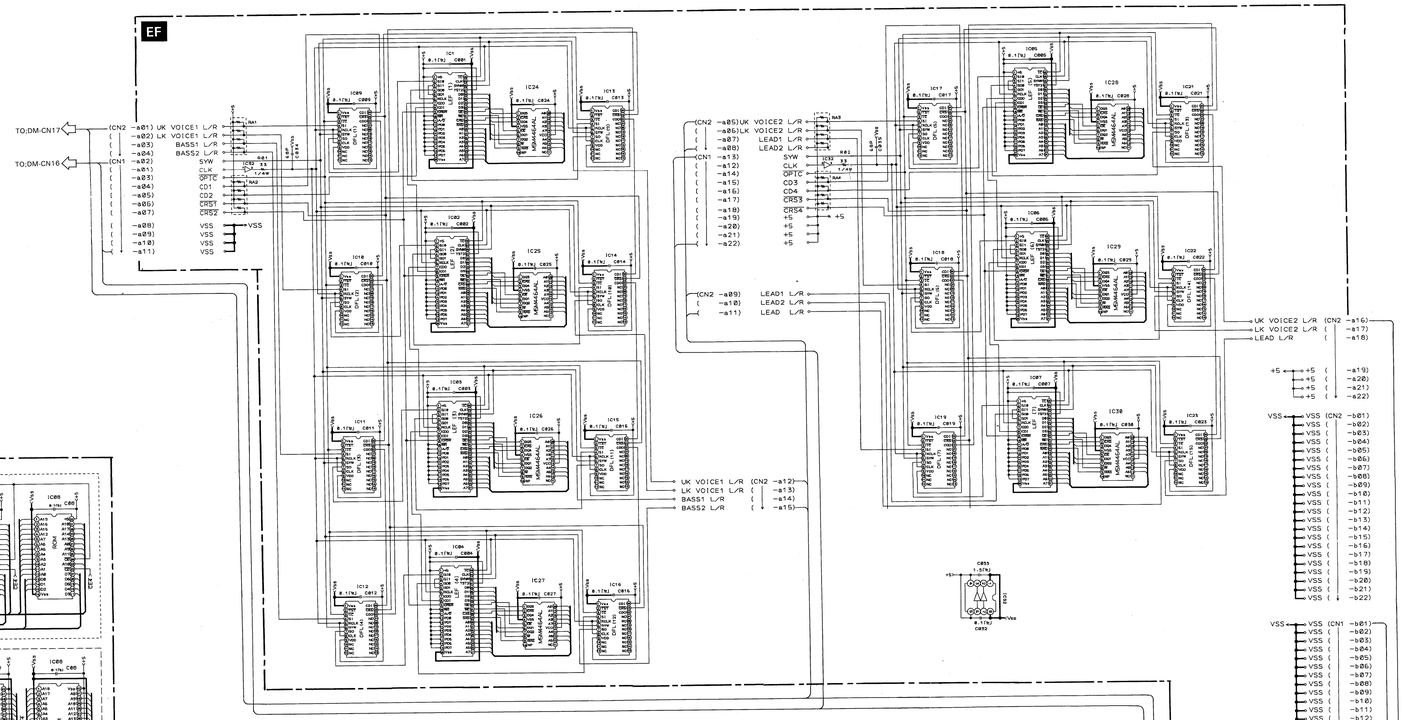

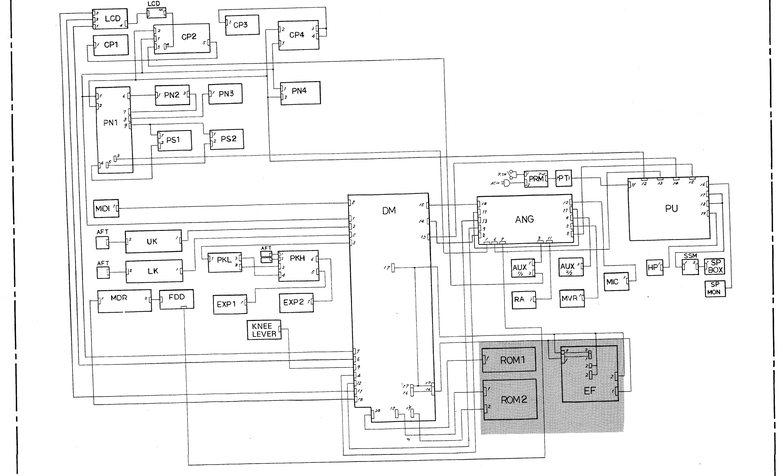

Circuit Board: ROM1 (VK748000) XI922B0 Japanese model S/# 1001~
ROM1 (VK838900) XJ004C0 (4)

1. IC
IC 1: TC538200P-H091 (XJ172C00) MASKROM RHY1 8M
IC 2: TC538200P-H092 (XJ173C00) MASKROM RHY2 8M
IC 3: TC538200P-H093 (XJ174C00) MASKROM RHY3 8M
IC 4: MS31800320PC366 (XJ175C00) MASKROM RHY4 8M
IC 5: MS31800320PC367 (XJ176C00) MASKROM RHY5 8M
IC 6: MS31800320PC368 (XJ177C00) MASKROM RHY6 8M
IC 9: SN74HC139NSR (XC727A00) DECODER
IC10~14: SN74AC11244NSE (X3111A00) BUS BUFFER

Circuit Board: ROM2 (VK748200) XI923B0 Japanese model S/# 1001~
ROM2 (VK837300) XJ005C0 (4)

1. IC
IC 1: HN62408PD64 (XJ180C00) MASKROM AWM1 8M
IC 2: HN62408PD65 (XJ181C00) MASKROM AWM2 8M
IC 3: HN62408PD66 (XJ182C00) MASKROM AWM3 8M
IC 4: HN62408PD67 (XJ183C00) MASKROM AWM4 8M
IC 5: HN62408PD68 (XJ184C00) MASKROM AWM5 8M
IC 6: HN62408PD69 (XJ185C00) MASKROM AWM6 8M
IC 7: HN62408PD70 (XJ186C00) MASKROM AWM7 8M
IC 8: HN62408PD71 (XJ187C00) MASKROM AWM8 8M
IC 9: LH53803A (XJ188C00) MASKROM AWM9 8M
IC10: LH53803B (XJ189C00) MASKROM AWM10 8M
IC11: LH53803D (XJ190C00) MASKROM AWM11 8M
IC12: LH53803H (XJ191C00) MASKROM AWM12 8M
IC13: LH53803J (XJ192C00) MASKROM AWM13 8M
IC14: LH53803L (XJ193C00) MASKROM AWM14 8M
IC15: LH53803S (XJ194C00) MASKROM AWM15 8M
IC16: LH53803Y (XJ195C00) MASKROM AWM16 8M
IC17,18: SN74HC139NSR (XC727A00) DECODER
IC19~28: SN74AC11244NSE (X3111A00) BUS BUFFER

Circuit Board: EF (VK748300) XI921B0 Japanese model S/# 1001~
EF (VK747400) XJ003A0 (4)

1. IC
IC 1~7: YM3415B (XE450B00) LEF
IC 9~19,21~23: YM2406 (XA804A00) DFL
IC24~30: M5M4464AL-10 (XE070A00) DRAM 256K
IC32: T6400(S) (I0079500) DRIVER
2. Resistor Array
RA 1~4: RMLS4 J 104 (VB933600) 100K×4

■EL-90 OVERALL CIRCUIT DIAGRAM3/5 (PN1, PN2, PN3, PN4, CP1, CP2, CP3, CP4, LCD)

LCD UNIT

LCD

Circuit Board: LCD (VK749700) XJ108D0
1. IC
   IC 1: TC4050BF(TP1) (XJ120A00) BUFFER
   IC 2: NJM4558MT-1 (IG103520) OP AMP.
2. Transistor
   T 1~3: 2SA1162 O,Y (VJ927200)
   T 4: 2SC2712 Y (VJ927100)
3. Diode
   D 1~3: RLS-73 (VB797600)
4. Positive Thermistor
   SM 1: PTH60T222M 2.2K (VK775000)
5. Trimmer Potentiometer
   VR 1: B10K 3P EVN (VL521900)
6. Electrolyte Cap.
   C 2: 220μF 16V (UJ838220)

28CC1-8810050

CP1

CP2

Circuit Board: CP2 (VK645400) XI980D0
1. IC
   IC 1,2: PLD-72 BX7883W (XH998A00) LED DRIVER
2. Diode
   D501~562: HSM2836C
3. Chip LED
   L501~612: CL-150SD-CD RE (VJ979600)
4. Coil
   FLS01,502: SN3-205 10μH

CP3

Circuit Board: CP3 (VK645700) XI982D0 1/3
1. Diode
   D701~716: HSM2836C
2. Chip LED
   L701~712,715,716: CL-150SD-CD RE (VJ979600)

CP4

Circuit Board: CP4 (VK645800) XI982D0 2/3
1. IC
   IC 1: PLD-100 BX7882W (XH997A00) LED DRIVER
2. Diode
   D801~832: HSM2836C
3. Chip LED
   L801~860: CL-150SD-CD RE (VJ979600)
4. Electrolyte Cap. Array
   C806: EXF-P6680MF (VL439600)
5. Coil
   FL801,802: SN3-205 10μH

PN1

Circuit Board: PN1 (VK644800) XI979D0 1/4
1. IC
   IC 1: PLD-100 BX7882W (XH997A00) LED DRIVER
   IC 2: PLD-17 BX7884W (XH999A00) LAMP DRIVER
2. Diode
   D101~115: HSM2836C
3. Chip LED
   L101~129: CL-150SD-CD RE (VJ979600)
4. Coil
   FL 1,2: SN3-205 10μH

PN2

Circuit Board: PN2 (VK645200) XI984C0
1. Diode
   D 1~5: 1SS133 (IF003450)
2. LED
   LED 3: SLZ-989C-03 RE (VL387200)
3. Rotaly Encoder: EC248GSD (VC844200) TEMPO
4. LED Display: SL-9284-22 7seg (VC999500) TEMPO, BAR(2pcs
5. Connector Assembly
   CN 1: DS-KR 10P L=70mm PN2(CN1)−PN1(CN6)
   CN 2: DS-KR 8P L=150mm PN2(CN2)−PN1(CN7)

TEMPO DISPLAY

28CC1-8810067

PN3

Circuit Board: PN3 (VK644900) XI979D0 3/4
1. Diode
   D201~203: HSM2836C
2. Chip LED
   L201~205: CL-150SD-CD RE (VJ979600)

PN4

Circuit Board: PN4 (VK645000) XI979D0 2/4
1. IC
   IC 1: PLD-72 BX7883W (XH998A00) LED DRIVER
2. Diode
   D301~309: HSM2836C
   D310~313: HRP100
3. Chip LED
   L301~310, 313~315: CL-150SD-CD RE (VJ979600)
   L311,312: CL-155D/PG-CD RE/GR
4. Coil
   FL 1,2: SN3-205 10μH
5. LED Display: LC-20HVL7 7seg. (VK000900) SONG SELECT

PS1

Circuit Board: PS1 (VJ332100) XH717A0
1. Diode
   D 1~9: 1SS176 (VA240700)
2. Push Switch
   1: 15AL (VF731200) 1
   2: 15AL (VF731300) 2
   3: 15AL (VF731400) 3
   4: 15AL (VF731500) 4
   13: 15AL (VK083900) 13
   14: 15AL (VK084100) 14
   15: 15AL (VK084200) 15
   16: 15AL (VK084400) 16
   M./TO DISK: 15AL (VL173000) M./TO DISK

28CC1-8810064

PS2

Circuit Board: PS2 (VJ332200) XH718A0
1. Diode
   D 1~9: 1SS176 (VA240700)
2. Push Switch
   5: 15AL (VF731600) 5
   6: 15AL (VF731700) 6
   7: 15AL (VF731800) 7
   8: 15AL (VF731900) 8
   9: 15AL (VF732000) 9
   10: 15AL (VF732100) 10
   11: 15AL (VF732200) 11
   12: 15AL (VF732300) 12
   D: 15AL (VF732900) D.

28CC1-8810064

HYBRID IC

PLD-100

PLD-72

PLD-17

■EL-90 OVERALL CIRCUIT DIAGRAM 4/5 (UK, LK, PKL, PKH, MDR, EXP1, EXP2, KNEELEVER)

1950

AFTER TOUCH SENSOR

UK (MK)

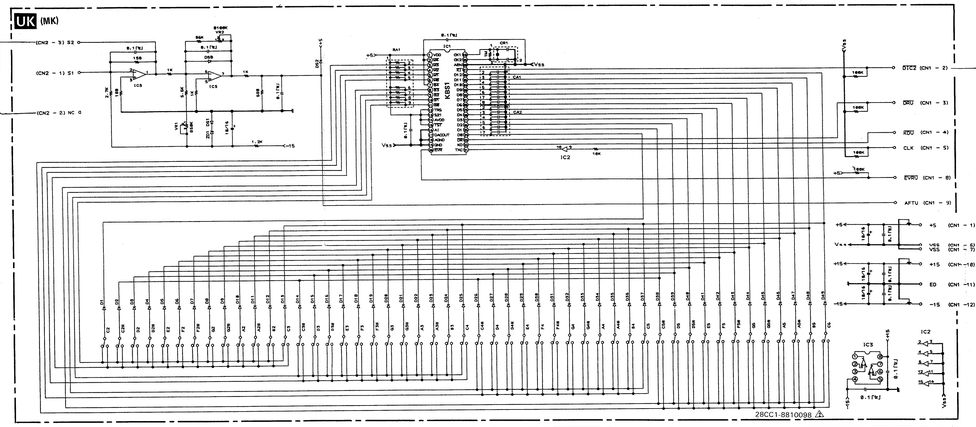

■EL-90 OVERALL CIRCUIT DIAGRAM 5/5 (ANG, AUX, RA, MVR, MIC, HP, PU, PRM)

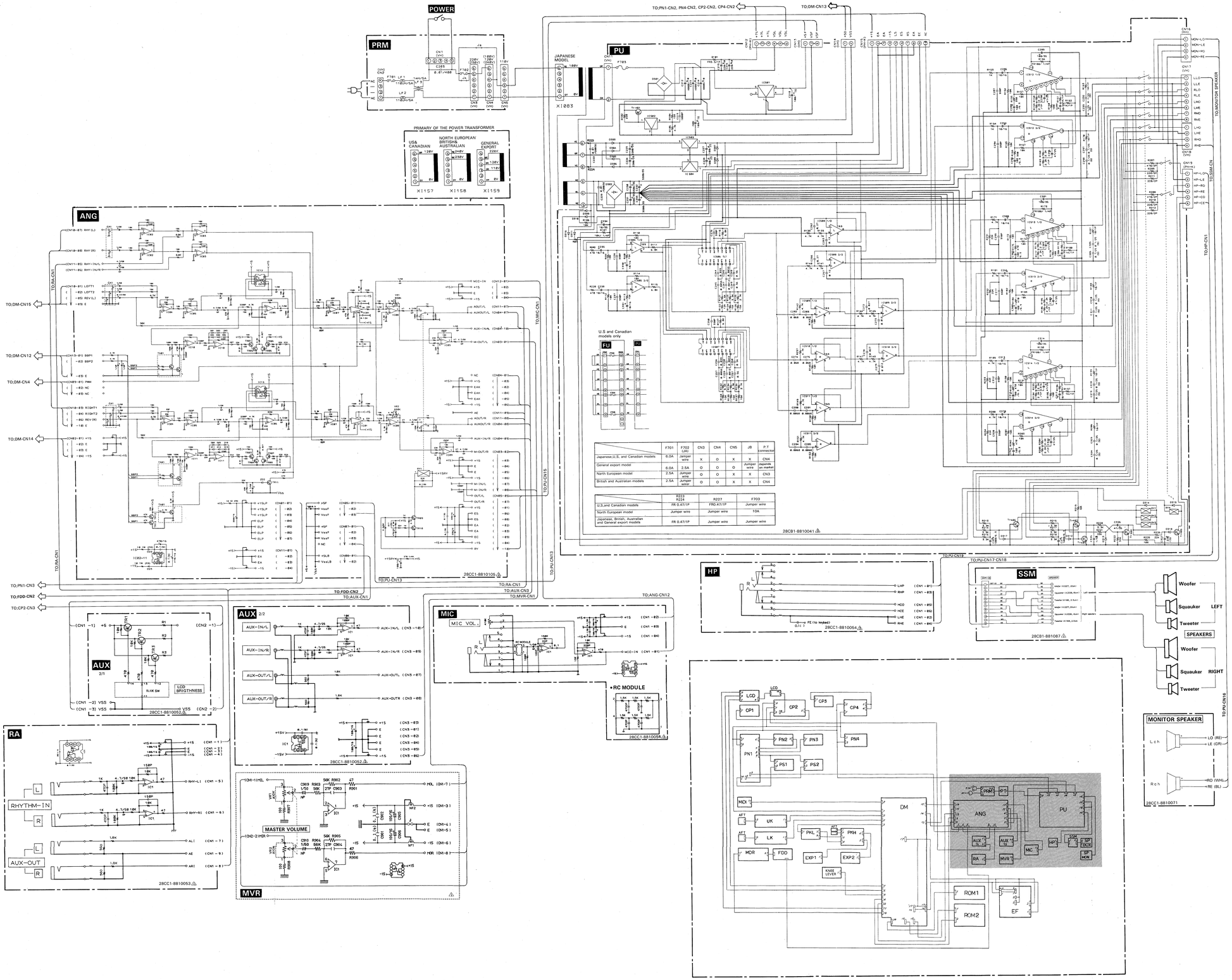

	F701	F702 (JA)	CN3	CN4	CN5	JB	P.T connector
Japanese,U.S. and Canadian models	6.0A	Jumper wire	X	O	X	X	CN4
General export model	6.0A	2.5A	O	O	O	Jumper wire	depends on market
North European model	2.5A	Jumper wire	O	O	X	X	CN3
British and Australian models	2.5A	Jumper wire	O	O	X	X	CN4

	R223 R224	R227	F703
U.S.and Canadian models	FR 0.47/1P	FR0.47/1P	Jumper wire
North European model	Jumper wire	Jumper wire	10A
Japanese, British, Australian and General export models	FR 0.47/1P	Jumper wire	Jumper wire

Circuit Board: ANG (VK748600) XJ112C0

1. IC
   IC 1:- MS283P (XI315A00) VCA.
   IC 2,3,11: RC4558DV (IG001390) OP AMP.
   IC 12,13: MS201P (XJ223A00) SW-OP AMP.
2. Transistor
   Q1 : 1~4,9~13 2SC1815 Y,GR (IC1815O0)
   Q2 : 5~8 2SA1015 O,Y (IA101580)
3. Digital Transistor Array
   TA 1: DTC143T (VK349600)
4. Diode
   D1 : 1~18 1SS133 (IF003450)
   D2 : 22,23 11E64 (VB481900)
5. Zener Diode
   ZD 1: MTZ10B 10V (VA085900)
   ZD 2: MTZ3.0B 3.0V (VL119100)
6. Fuse Resistor (FR): 10Ω 1W J (VI637400)
7. Trimmer Potentiometer
   VR 1,2: B50K 3P EVN (VL522200)
8. Electrolytic Cap.
   470;16: 470μF 16V (UJ338470)
   2200;16: 2200μF 16V (VF173700)
9. Semiconductive Cera. Cap.
   0.1(1e): 0.1μF 16V N (FZ005060)
10. Ceramic Cap. Array
    CA 1: 1000pF×8 50V M (VL122400)
11. LC Filter
    SW-CN: DSS306-93F223Z1 22000p (VD542700)
12. Relay
    RY 1: DC G5A-237P (VB896300)

Circuit Board: PRM (VJ636200) XI791A0 (J)
PRM (VJ636300) XI791A0 (U,C)
PRM (VJ636400) XI791A0 (D,H,B,A)
PRM (VJ636500) XI791A0 (K,M)

1. Ceramic Cap.
   C203: 0.01μF 125V (VA302800)
2. Coil
   LF 1,2: SN10-500J (VJ898200)
   or SF1-T10-50-01 (VK900000)
   LF 3: SC-05-10J (VJ898300)
   or TF2528S-102Y5R0 (VK315900)
3. Fuse
   F701 (J,X,M): 6.0A 250V (KB001280)
   (U,C): 6.0A 250V (KB001250)
   (D,H,B,A): T 2.5A S 250V (KB000690)
   F702 (K,M): T 2.5A S 250V (KB000690)
   (others): Jumper Wire

Circuit Board: PU XJ545A0

1. IC
   IC501: SI-3050C (XI164A00) 5V REGULATOR
   IC502: MS237L (XI165A00) REGULATOR
   IC503: NJM7815FA (XD853A00) 15V REGULATOR
   IC504: NJM7915FA (XD854A00) 15V REGULATOR
   IC505,508~511: NJM4558S (IG076B00) OP AMP.
   IC506,507: MS227P (KF751A00) EQUAL(ZEN.
   IC512~514: STK4152-2 (XI163A00) 30W P.AMP
2. Transistor
   Tr401: 2SA1451 O,Y (VJ828100)
   Tr402~406: 2SC1815 GR (VJ824400)
3. Diode
   D303~317: 1ES4 (VB481900)
4. Diode Bridge
   D301,302: RBV-602 6A 200V (VL834300)
5. Zener Diode
   D318: MTZ15B 15.0V (VB405800)
6. Metal Oxide Film Resistor
   R159,169,177, 186,194,205: 2.2KΩ 1W J (VC748400)
   R161,162,179, 180,196,197: 1.0KΩ 1W J (VC747400)
   R163,170,187, 188,199,206: 10Ω 1W J (VC742500)
   R207,208: 470Ω 2W J (VC760500)
   R209~212: 220Ω 2W J (VC739500)
7. Fuse Resistor
   R101: 3.3Ω 1W J (VJ828900)
   R156,173,198: 100Ω 1/4 J (HW095100)
   R223,224: 0.47Ω 1W J (VL130300)
   (J,U,C,0,B,A,X,M): Jumper Wire
   R227 (U,C): 0.47Ω 1W J (VL130300)
   (others): Jumper Wier
8. Electrolytic Cap.
   C212~214: 10000μF 10V (VL276200)
   C215,216: 220μF 10V (UJ828220)
   C223,224: 2200μF 25V (VL232300)
   C230~233: 3300μF 35V (VL232400)
   C271,329: 1000μF 6.3V (UJ819100)
   C327: 220μF 25V (UJ848220)
9. Ceramic Cap.
   C222,229: 0.01μF 500V P (VA302600)
10. Semiconductive Cera. Cap.
    C292,293,297,298, 305,306,310,311, 318,319,323,324: 0.1μF 25V Z (VC694800)
11. Relay
    RY 1~4: DH24D2-01(M) 24V (KC001940)
12. Fuse
    F703 (H): T 10.0A S 250V (VK901600)
    (others): Jumper Wire
13. Connector Assembly
    BW1-BW1,BW2-BW2: SCN-SCN 6p L= 100mm

Circuit Board: FU XJ558B0 (U,C only)

1. Fuse
   F703: 10.0A 250V (KB001390)
   F704,705: 7.0A 125V (KB001520)

Circuit Board: AUX (VK749300) XJ088C0

1. IC
   IC 1: RC4558DV (IG001390) OP AMP.
2. Transistor
   Q 1~3 2SA1296 Y,GR (VK806700)
3. Metal Film Resistor
   R 1: 1 1Ω 3W J (VL060000)
   R 2: 1 8Ω 3W J (VL060100)
   R 3: 2 2Ω 3W J (VL060200)
4. Semiconductive Cera. Cap.
   0.1(1e): 0.1μF 16V N (FZ005060)
5. Coil
   SBT: SBT-0260TF 60μH (VF968800)
6. LC Filter
   CCD: DSS306-93F223Z1 22000p (VD542700)
7. Slide Switch
   S-SW: SSSF14 (VH101900) LCD BRICHTNESS
8. Pin Jack
   PIN-CN: YKC21-0476 (VJ885400) AUX IN;OUT(L/R)

Circuit Board: HP (VJ660100) XHB04B0

1. Semiconductive Cera. Cap.
   0.1(1e): 0.1μF 16V N (FZ005060)
2. Coil
   SBT: SBT-0260TF 60μH (VF968800)
3. Phone Jack
   HP: YKB21-5008 BL (VB891100) HEADPHONES

Circuit Board: MIC (VJ659500) XJ80680

1. IC
   IC 1: RC4558DV (IG001390) OP AMP.
2. Diode
   D 1: SC527 (VL434500)
3. Variable Resistor
   A10K VR: A10K RK094111 (VL048300) MIC VOL
4. Semiconductive Cera. Cap.
   0.1(1e): 0.1μF 16V N (FZ005060)
5. Coil
   SBT: SBT-0260TF 60μH (VF968800)
6. LC Filter
   CCD: DSS306-93F223Z1 22000p (VD542700)
7. Phone Jack; YKB21-5006 (LB101870) MIC
8. RC Module
   RCA: H8DN2448 (VL407800)

Circuit Board: RA (VK749100) XJ082A0

1. IC
   IC 1: RC4558DV (IG001390) OP AMP.
2. Semiconductive Cera. Cap.
   0.1(1e): 0.1μF 16V N (FZ005060)
3. Coil
   SBT: SBT-0260TF 60μH (VF968800)
4. EMI Filter
   CCD: LS MT Y223NB 22000p (FZ005920)
5. Phone Jack
   AUX-OUT,RHY-IN L: YKB21-5014 BL (VC687500)
   AUX-OUT,RHY-IN R: YKB21-5154 GY (VD378100)

Circuit Board: MVR (VK645900) XI982D0 3/3

1. IC
   IC 1: RC4558DV (IG001390) OP AMP.
2. Variable Resistor
   VOL 1,2: A10K×3 MASTER VOLUME
3. EMI Filter
   NF 1,2: DSS306-93F223Z1 22000p (VD542700)

YAMAHA Electone®

EL-90

PARTS LIST

■ CONTENTS（目次）

ELECTRICAL PARTS（電気部品）…… 1
POWER AMPLIFIER（電源アンプ）…… 7
OVERALL ASSEMBLY（総組立）…… 8
UPPER UNIT（上部ユニット）……10
PANEL ASSEMBLY（パネルアセンブリー）……11
CENTER PANEL UNIT（センターパネルユニット）……13
LEFT PANEL UNIT（レフトパネルユニット）……15
RIGHT PANEL UNIT（ライトパネルユニット）……16
SWITCH ESCUTCHEON Ass'y(A)（スイッチ枠Ass'y(A)）…17
SWITCH ESCUTCHEON Ass'y(B)/(C)
（スイッチ枠Ass'y(B)/(C)）……19
SWITCH ESCUTCHEON Ass'y(D)（スイッチ枠Ass'y(D)）‥20
SWITCH ESCUTCHEON Ass'y(E)/(F)
（スイッチ枠Ass'y(E)/(F)）……21
KEYBOARD ASSEMBLY(UK,LK)
（FS鍵盤Ass'y(UK,LK)）……22
PANEL CASE UNIT（パネルケースユニット）……23
ARM UNIT(LEFT/RIGHT)（腕木ユニット(左/右)）……26
KNEE LEVER UNIT（ニーレバーユニット）……28
PEDAL UNIT（ペダルユニット）……29
EXPRESSION PEDAL（EXPペダル）……31
EXPRESSION PEDAL (SECOND)（セカンドEXPペダル）33
SPEAKER BOX UNIT（スピーカーボックスユニット）……35
BENCH（椅子）……36

Note) DESTINATION ABBREVIATIONS

J : Japanese model	A : Australian model
U : U.S. model	E : European model
C : Canadian model	D : German model
X : General model	B : British model
M : South African model	I : Indonesian model
H : North European model	

■ELECTRICAL PARTS（電気部品）

	Ref. No.	Part No.	Description		部品名	Remarks	ランク
*		VK747800	Circuit Board	DM	DMシート	J S/#1001～	93
*		VK836600	Circuit Board	DM(4)	DMシート	(EL-90)	93
*		VK748600	Circuit Board	ANG	ANGシート		22
*		VK748000	Circuit Board	ROM1	ROM1シート	J S/#1001～	43
*		VK836900	Circuit Board	ROM1(4)	ROM1シート		45
*		VK748200	Circuit Board	ROM2	ROM2シート	J S/#1001～	70
*		VK837300	Circuit Board	ROM2(4)	ROM2シート		72
*		VK644800	Circuit Board	PN1	PN1シート		23
*		VK645200	Circuit Board	PN2	PN2シート		14
*		VK644900	Circuit Board	PN3	PN3シート		08
*		VK645000	Circuit Board	PN4	PN4シート		19
*		VK645100	Circuit board	CP1	CP1シート		09
*		VK645400	Circuit Board	CP2	CP2シート		29
*		VK645700	Circuit Board	CP3	CP3シート		12
*		VK645800	Circuit Board	CP4	CP4シート		21
*		VJ332100	Circuit Board	PS1	PS1シート		18
*		VJ332200	Circuit Board	PS2	PS2シート		18
*		VK749700	Circuit Board	LCD	LCDシート		13
*		VK748300	Circuit Board	EF	EFシート	J S/#1001～	48
*		VK837400	Circuit Board	EF(4)	EFシート		52
*		VK748400	Circuit Board	MDR	MDRシート	J S/#1001～	36
*		VK837500	Circuit Board	MDR(4)	MDRシート		38
*		VK645900	Circuit Board	MVR	MVRシート		10
*		VK836400	Circuit Board	MIDI	MIDIシート		07
*		VK749300	Circuit board	AUX	AUXシート		10
*		VJ660100	Circuit Board	HP	HPシート		13
*		VJ659500	Circuit Board	MIC	MICシート		09
*		VK749100	Circuit Board	RA	RAシート		09
*		VK749000	Circuit Board	MK	MKシート		15
*		VK806400	Circuit Board	PKH	PKHシート		12
*		VK806200	Circuit Board	PKL	PKLシート		14
*		VJ636200	Circuit Board	PRM	PRMシート	J	10
*		VJ636300	Circuit Board	PRM	PRMシート	U,C	11
*		VJ636400	Circuit Board	PRM	PRMシート	D,H,B,A	11
*		VJ636500	Circuit Board	PRM	PRMシート	X,M	11
*		VJ965100	Circuit Board	EXP	EXPシート	2CH	07
*		VJ965300	Circuit Board	EXP	EXPシート	2ND	07
*		VJ695800	Circuit Board	KNELEV	KNELEVシート		02
*		VK747800	Circuit Board	DM	DMシート	J S/#1001～	93
*		VK836600	Circuit Board	DM(4)	DMシート		93
		IG103520	IC	NJM4558MT-1	IC	OP AMP.	03
		XA862B00	IC	NJM4560M(T1)	IC	OP AMP.	02
		IG079500	IC	T6400(S)	IC	DRIVER	05
*		XC725A00	IC	SN74HC14NSR	IC	INVERTER	03
*		XC726A00	IC	SN74HC74NSR	IC	D.FF	01
		XD830A00	IC	SN74HC04NSR	IC	INVERTER	01
		XD831A00	IC	SN74HC08NSR	IC	AND	01
		XD833A00	IC	SN74HC32NSR	IC	OR	01
		XD835A00	IC	SN74HC138NSR	IC	DECODER	02
		XD836A00	IC	SN74HC174NSR	IC	D.FF	02
*		XG387A00	IC	SN74HC373NSR	IC	D.LATCH	03
*		XI299A00	IC	TC74HC4050AF-T1	IC	BUFFER	02
*		XI307A00	IC	SN74AC11011NSR	IC	AND	03
*		XI313A00	IC	SN74AS04NSR	IC	INVERTER	03
*		XI314A00	IC	SN74AS32NSR	IC	OR	03
*		XI316A00	IC	SN74LS03NSR	IC	NAND	01
*		XI974A00	IC	SN74AC11074NSR	IC	D.FF	04
*		XB529A00	IC	HD63C03YP	IC	MPU	10
*		XB809A00	IC	TC17G005AN-0023	IC	MI-1	05
		XG662A00	IC	TMC57800N	IC	MIX5	07
*		XI286A00	IC	M37700SAFP	IC	CPU	10
		XE070A00	IC	M5M4464AL-10	IC	DRAM 256K	08
*		XI021A00	IC	TC51832FL-10	IC	PSRAM 256K	08
		XI295A00	IC	HM658128DFP-10	IC	PSRAM	17
*		XJ122A00	IC	TC5565AFL-10	IC	SRAM 64K	08
*		XJ811B00	IC		IC	MASKROM MAIN	
*		XJ127C00	IC		IC	MASKROM BANK	
*		XJ128F00	IC	TC531000CP-H094	IC	M.ROM SLAVE 1,2	
*		XJ130D00	IC		IC	MASKROM SLAVE 3	
*		XA804A00	IC	YM2406	IC	DFL	10
		XE449A00	IC	YM3413	IC	LDSP	10
		XE789A00	IC	YM3028	IC	DAL2	10
		XH235B00	IC	YM7132	IC	OPWZ	16
		XH236A00	IC	YM7131	IC	OPLZ	16
*		XH238A00	IC	YM3440	IC	LEF2	12
*		XI976A00	IC	YSF207	IC	DCF1	21
*		XH688A00	IC	μPD43256AGU	IC	SRAM 1M	13
*		VJ927500	Photo Coupler	PC-400Z	フォトカプラ		04

*New Parts（新規部品）

ランク：Japan only

	Ref. No.	Part No.	Description		部品名	Remarks	ランク
*		VJ927200	Transistor	2SA1162 O,Y	トランジスタ		01
*		VJ927100	Transistor	2SC2712 Y	トランジスタ		01
		VB797600	Diode	RLS-73	ダイオード		01
		VH306300	Diode Array	DAN601	ダイオードアレイ	0.025A×6	03
		VH306400	Diode Array	DAP601	ダイオードアレイ	0.025A×6	03
*		VI993500	Zener Diode	MTZ5.6B 5.6V	ツェナーダイオード		01
		VF771900	Resistor Array	RGLE8X103J	抵抗アレイ	10K×8	01
*		VK860600	Resistor Array	RGLE5X103J	抵抗アレイ	10K×5	01
*		VK860700	Resistor Array	RGLE5X104J	抵抗アレイ	10K×5	01
		UJ818220	Electrolytic Cap.	220μF 6.3V	ケミコン		
		UJ818470	Electrolytic Cap.	470μF 6.3V	ケミコン		01
		UJ838220	Electrolytic Cap.	220μF 16V	ケミコン		01
		VH604600	Gold Cap.	1.0F 5.5V	ゴールドキャパシタ		06
		VH484100	Ceramic Cap. Array	100pF×8 50V M	セラコンアレイ		02
*		VJ944300	Ceramic Cap. Array	220pF×8 50V M	セラコンアレイ		01
		VD542700	LC Filter	DSS306-93F223Z1	LCフィルター	22000p	01
		QU007700	Ceramic Resonator	12.0MHz	セラミック振動子		03
		VE463500	Quartz Crystal Unit	AT-49/12.0MHz	水晶振動子		03
*		VK634300	Quartz Crystal Unit	25.6MHz DOC-492	水晶振動子		07
*		VJ928500	Chip Inductor	BLM32A06	チップインダクタ		01
*		VK748600	Circuit Board	ANG	ANGシート		22
		IG001390	IC	RC4558DV	IC	OP AMP.	03
*		XI315A00	IC	M5283P	IC	VCA	06
*		XJ223A00	IC	M5201P	IC	SW-OP AMP.	03
*		IA1015B0	Transistor	2SA1015 O,Y	トランジスタ		01
*		IC1815D0	Transistor	2SC1815.Y GR	トランジスタ		01
*		VK349600	Digital Transistor Array	DT5C143T	デジトラアレイ		04
		VB481900	Diode	11ES4	ダイオード		01
		IF003450	Diode	1SS133	ダイオード		01
*		VA095900	Zener Diode	MTZ10B 10V	ツェナーダイオード		01
*		VL119100	Zener Diode	MTZ3.0B 3.0V	ツェナーダイオード		01
		VI637400	Fuse Resistor	10Ω 1W J	ヒューズ抵抗		01
*		VL522200	Trimmer Potentiometer	B50K 3P EVN	半固定ボリューム		
		UJ838470	Electrolytic Cap.	470μF 16V	ケミコン		01
		VF173700	Electrolytic Cap.	2200μF 16V	ケミコン		02
		FZ005060	Semiconductive Cera. Cap.	0.1μF 16V N	半導体セラコン		01
*		VL122400	Ceramic Cap. Array	1000pF×8 50V M	セラコンアレイ		02
		VD542700	LC Filter	DSS306-93F223Z1	LCフィルター	22000p	01
		VB996300	Relay	DC G5A-237P	リレー		05
		VA078900	Jumper Wire	0.55	ジャンパー線		
*		VK748000	Circuit Board	ROM1	ROM1シート	J S/#1001～	43
*		VK836900	Circuit Board	ROM1(4)	ROM1シート		45
*		XC727A00	IC	SN74HC139NSR	IC	DECODER	02
*		XI311A00	IC	SN74AC11244NSE	IC	BUS BUFFER	06
*		XJ172C00	IC	TC538200P-H091	IC	MASKROM RHY1 8M	16
*		XJ173C00	IC	TC538200P-H092	IC	MASKROM RHY2 8M	16
*		XJ174C00	IC	TC538200P-H090	IC	MASKROM RHY3 8M	16
*		XJ175C00	IC	MS31800320PC366	IC	MASKROM RHY4 8M	16
*		XJ176C00	IC	MS31800320PC367	IC	MASKROM RHY5 8M	16
*		XJ177C00	IC	MS31800320PC368	IC	MASKROM RHY6 8M	16
*		VK748200	Circuit Board	ROM2	ROM2シート	J S/#1001～	70
*		VK837300	Circuit Board	ROM2(4)	ROM2シート		72
*		XC727A00	IC	SN74HC139NSR	IC	DECODER	02
*		XI311A00	IC	SN74AC11244NSE	IC	BUS BUFFER	06
*		XJ180C00	IC	HN62408PD64	IC	MASKROM AWM1 8M	16
*		XJ181C00	IC	HN62408PD65	IC	MASKROM AWM2 8M	16
*		XJ182C00	IC	HN62408PD66	IC	MASKROM AWM3 8M	16
*		XJ183C00	IC	HN62408PD67	IC	MASKROM AWM4 8M	16
*		XJ184C00	IC	HN62408PD68	IC	MASKROM AWM5 8M	16
*		XJ185C00	IC	HN62408PD69	IC	MASKROM AWM6 8M	16
*		XJ186C00	IC	HN62408PD70	IC	MASKROM AWM7 8M	16
*		XJ187C00	IC	HN62408PD71	IC	MASKROM AWM8 8M	16
*		XJ188C00	IC	LH53803A 8M	IC	MASKROM AWM9	16
*		XJ189C00	IC	LH53803B 8M	IC	MASKROM AWM10	16
*		XJ190C00	IC	LH53803D 8M	IC	MAKSROM AWM11	16
*		XJ191C00	IC	LH53803H 8M	IC	MASKROM AWM12	16
*		XJ192C00	IC	LH53803J 8M	IC	MASKROM AWM13	16
*		XJ193C00	IC	LH53803L 8M	IC	MASKROM AWM14	16
*		XJ194C00	IC	LH53803S 8M	IC	MASKROM AWM15	16
*		XJ195C00	IC	LH53803Y 8M	IC	MASKROM AWM16	16
*		VK644800	Circuit Board	PN1	PN1シート		23
*		XH997A00	IC	PLD-100 BX7882W	IC	LED DRIVER	
*		XH999A00	IC	PLD-17 BX7884W	IC	LAMP DRIVER	
		--	Diode	HSM2836C	ダイオード		
		VJ979600	Chip LED	CL-150SD-CD	チップLED	RE	

*New Parts (新規部品)

ランク：Japan only

	Ref. No.	Part No.	Description		部品名	Remarks	ランク
		--	Coil	SN3-205 10μH	コイル		
*		VK804700	Rubber Contact	1×1 Keys BE	ラバースイッチ	4pcs FILL IN	
*		VK806900	Rubber Contact	2×1 Keys BE	ラバースイッチ	1pc. KEY.PER.	
*		VK807200	Rubber Contact	2×8 Keys BE	ラバースイッチ	1pc. RHYTHM	
*		VK804900	Rubber Contact	7 Keys GY	ラバースイッチ	1pc. MAX/MIN	
*		VK645200	Circuit Board	PN2	PN2シート		14
		IF003450	Diode	1SS133	ダイオード		01
*		VL387200	LED	SLZ-989C-03 RE	LED		01
		VC844200	Rotaly Encoder	EC24BG5D	ロータリーエンコーダ	TEMPO	08
		VC999500	LED Display	SL-9284-22	LEDディスプレイ	TEMPO,BAR/BEAT	07
		--	Connector Assembly	8P-150	DS-KR束線	PN2_CN2-PN1_CN7	
		--	Connector Assembly	10P-70	DS-KR束線	PN2_CN1-PN1_CN6	
*		VK644900	Circuit Board	PN3	PN3シート		08
		--	Diode	HSM2836C	ダイオード		
		VJ979600	Chip LED	CL-150SD-CD	チップLED	RE	
*		VK804700	Rubber Contact	1×1 Keys BE	ラバースイッチ	1pc. BASIC REG.	
*		VK806900	Rubber Contact	2×1 Keys BE	ラバースイッチ	2pcs BASIC REG.	
*		VK645000	Circuit Board	PN4	PN4シート		19
*		XH998A00	IC	PLD-72 BX7883W	IC	LED DRIVER	
		--	Diode	HSM2836C	ダイオード		
		--	Diode	HRP100	ダイオード		
		VJ979600	Chip LED	CL-150SD-CD	チップLED	RE	
		--	Chip LED	CL-155SD/PG-CD	チップLED	RE/GR	
		--	Coil	SN3-205 10μH	コイル		
*		VK805400	Rubber Contact	9 Keys BE	ラバースイッチ	1pc. REG/PLAY	
*		VK805500	Rubber Contact	7 Keys GY	ラバースイッチ	1pc. MUSIC D.R.	
*		VK000900	LED Display	LC-204VL7 7seg.	LEDディスプレイ	SONG SELECT	07
*		VK645100	Circuit Board	CP1	CP1シート		09
		--	Diode	HSM2836C	ダイオード		
		VJ979600	Chip LED	CL-150SD-CD	チップLED	RE	
*		VK804700	Rubber Contact	1×1 Keys BE	ラバースイッチ	1pc. SUSTAIN	
*		VK806900	Rubber Contact	2×1 Keys BE	ラバースイッチ	1pc. SUSTAIN	
*		VK804900	Rubber Contact	7 Keys GY	ラバースイッチ	1pc. REVERB	
*		VK645400	Circuit Board	CP2	CP2シート		29
*		XH998A00	IC	PLD-72 BX7883W	IC	LED DRIVER	
		--	Diode	HSM2836C	ダイオード		
		VJ979600	Chip LED	CL-150SD-CD	チップLED	RE	
		--	Coil	SN3-205 10μH	コイル		
*		VK807100	Rubber Contact	2×7 Keys BE	ラバースイッチ	4pcs VOICE 1 2	
*		VK804900	Rubber Contact	7 Keys GY	ラバースイッチ	8pcs BRI./MEL.	
*		VK645700	Circuit Board	CP3	CP3シート		12
		--	Diode	HSM2836C	ダイオード		
		VJ979600	Chip LED	CL-150SD-CD	チップLED	RE	
*		VK805200	Rubber Contact	18 Keys BE	ラバースイッチ	1pc. DATA CON.	
*		VK805700	Rubber Contact	15 Keys BE	ラバースイッチ	1pc. DISPLAY S.	
*		VK805800	Rubber Contact	1 Keys BE	ラバースイッチ	2pcs	
*		VK645800	Circuit Board	CP4	CP4シート		21
*		XH997A00	IC	PLD-100 BX7882W	IC	LED DRIVER	
		--	Diode	HSM2836C	ダイオード		
		VJ979600	Chip LED	CL-150SD-CD	チップLED	RE	
		--	Coil	SN3-205 10μH	コイル		
*		VL439600	Ceramic Cap. Array	EXF-P6680MF	セラコンアレイ		
*		VK807000	Rubber Contact	2×3 Keys BE	ラバースイッチ	3pcs L/P VOICE	
*		VK804900	Rubber Contact	7 Keys GY	ラバースイッチ	6pcs MAX/MIN	
*		VJ332100	Circuit Board	PS1	PS1シート		18
		VA240700	Diode	1SS176	ダイオード		01
		VF731200	Push Switch	15AL	照光プッシュスイッチ	1	05
		VF731300	Push Switch	15AL	照光プッシュスイッチ	2	05
		VF731400	Push Switch	15AL	照光プッシュスイッチ	3	05
		VF731500	Push Switch	15AL	照光プッシュスイッチ	4	05
*		VK083900	Push Switch	15AL	照光プッシュスイッチ	13	05
*		VK084100	Push Switch	15AL	照光プッシュスイッチ	14	05
*		VK084200	Push Switch	15AL	照光プッシュスイッチ	15	05
*		VK084400	Push Switch	15AL	照光プッシュスイッチ	16	05
*		VL127300	Push Switch	15AL	照光プッシュスイッチ	M./TO DISK	05
*		JX000070	Lamp	AF12007201	ランプ	12V 35mA φ0.25	
*		VJ332200	Circuit Board	PS2	PS2シート		18
		VA240700	Diode	1SS176	ダイオード		01
		VF731600	Push Switch	15AL	照光プッシュスイッチ	5	05

*New Parts (新規部品)

ランク：Japan only

	Ref. No.	Part No.	Description		部品名	Remarks	ランク
		VF731700	Push Switch	15AL	照光プッシュスイッチ	6	05
		VF731800	Push Switch	15AL	照光プッシュスイッチ	7	05
		VF731900	Push Switch	15AL	照光プッシュスイッチ	8	05
		VF732000	Push Switch	15AL	照光プッシュスイッチ	9	05
		VF732100	Push Switch	15AL	照光プッシュスイッチ	10	05
		VF732200	Push Switch	15AL	照光プッシュスイッチ	11	05
		VF732300	Push Switch	15AL	照光プッシュスイッチ	12	05
		VF732900	Push Switch	15AL	照光プッシュスイッチ	D	05
*		JX000070	Lamp	AF12007201	ランプ	12V 35mA φ0.25	
*		VK749700	Circuit Board	LCD	LCDシート		13
		IG103520	IC	NJM4558MT-1	IC	OP AMP.	03
*		XJ120A00	IC	TC4050BF(TP1)	IC	BUFFER	01
* *		VJ927200	Transistor	2SA1162 O,Y	トランジスタ		01
*		VJ927100	Transistor	2SC2712 Y	トランジスタ		01
		VB797600	Diode	RLS-73	ダイオード		01
*		VK775000	Positive Thermistor	PTH60T222M 2.2K	ポジスタ		05
*		VL521900	Trimmer Potentiometer	B10K 3P EVN	半固定ボリューム		
		UJ838220	Electrolytic Cap.	220μF 16V	ケミコン		01
*		VK748300	Circuit Board	EF	EFシート	J S/#1001～	48
*		VK837400	Circuit Board	EF(4)	EFシート		52
		IG079500	IC	T6400(S)	IC	DRIVER	05
		XE070A00	IC	M5M4464AL-10	IC	DRAM 256K ZIP	08
*		XA804A00	IC	YM2406	IC	DFL	10
		XE450B00	IC	YM3415B	IC	LEF	09
		VB933600	Resistor Array	RMLS4 J 104	抵抗アレイ	100K×4	01
*		VK748400	Circuit Board	MDR	MDRシート	J S/#1001～	36
*		VK837500	Circuit Board	MDR(4)	MDRシート		38
		XD835A00	IC	SN74HC138NSR	IC	DECODER	02
		XE052A00	IC	TC74HC393AF-TP1	IC	BINARY COUNTER	03
		XH218A00	IC	SN74HC125NSR	IC	BUS BUFFER	02
*		XI296A00	IC	TC74HCT373AF-T1	IC	D.LATCH	03
* *		XI297A00	IC	TC74HCT04AF-T1	IC	INVERTER	01
* *		XI308A00	IC	SN74AC11000NSR	IC	NAND	03
* *		XI309A00	IC	SN74AC11032NSR	IC	OR	03
* *		XI310A00	IC	SN74AC11008NSR	IC	AND	03
* *		XI312A00	IC	SN74AC11138NSR	IC	DECODER	05
*		XB529A00	IC	HD63C03YP	IC	MPU	10
		XE451A00	IC	TMP82C54M-2	IC	TIMER/COUNTER	06
* *		XE909C00	IC	WD37C65C	IC	FDD CONTROL	12
* *		XI294A00	IC	TMP82C37AM-5	IC	DMA	08
		XH688A00	IC	μPD43256AGU-10	IC	SRAM 1M	13
*		XJ161G00	IC		IC	MASKROM MDR 1M	
		VF771900	Resistor Array	RGLE8X103J	抵抗アレイ	10K×8	01
		VF773500	Resistor Array	RGLE4X103J	抵抗アレイ	10K×4	01
*		VL078100	Resistor Array	RGLE4X151J	抵抗アレイ	150×4	01
		VD542700	LC Filter	DSS306-93F223Z1	LCフィルター	22000p	01
		QU007700	Ceramic Resonator	12.0MHz	セラミック振動子		03
		VI927400	Quartz Crystal Unit	16.0MHz DOC-492	水晶発振器		07
*		VJ928500	Chip Inductor	BLM32A06	チップインダクタ		01
*		VK645900	Circuit Board	MVR	MVRシート		10
		IG001390	IC	RC4558DV	IC	OP AMP.	03
		--	Variable Resistor	A10K×3	3連ﾛｰﾀﾘｰﾎﾞﾘｭｰﾑ	MASTER VOLUME	
		VD542700	EMI Filter	DSS306-93F223Z1	LCフィルター	22000p	01
*		VK836400	Circuit Board	MIDI	MIDIシート		07
		VF968800	Coil	SBT-0260TF 60μ	コイル		01
*		VJ885500	DIN Jack	3P YKF51-5054	DINジャック	MIDI IN/OUT	04
*		VK749300	Circuit Board	AUX	AUXシート		10
		IG001390	IC	RC4558DV	IC	OP AMP.	03
*		VK806700	Transistor	2SA1296 Y,GR	トランジスタ		02
* *		VL060000	Metal Film Resistor	1.1Ω 3W J	金属皮膜抵抗		01
* *		VL060100	Metal Film Resistor	1.8Ω 3W J	金属皮膜抵抗		01
* *		VL060200	Metal Film Resistor	2.2Ω 3W J	金属皮膜抵抗		01
		FZ005060	Semiconductive Cera. Cap.	0.1μF 16V N	半導体セラコン		01
		VF968800	Coil	SBT-0260TF 60μ	コイル		01
		VD542700	LC Filter	DSS306-93F223Z1	LCフィルター	22000p	01
		VH101900	Slide Switch	SSSF14	スライドスイッチ	LCD BRICHTNESS	03
*		VJ885400	Pin Jack	YKC21-0476	ピンジャック	AUX IN/OUT(L/R)	02
*		VK856400	Holder		受金具		03
		VA078900	Jumper Wire	0.55	ジャンパー線		
*		VJ660100	Circuit Board	HP	HPシート		13
		FZ005060	Semiconductive Cera. Cap.	0.1μF 16V N	半導体セラコン		01

*New Parts（新規部品）

ランク：Japan only

	Ref. No.	Part No.	Description		部品名	Remarks	ランク
		VF968800	Coil	SBT-0260TF 60μ	コイル		01
		VB891100	Phone Jack	YKB21-5008 BL	ホーンジャック	HEADPHONES	03
*		VJ659500	Circuit Board	MIC	MICシート		09
		IG001390	IC	RC4558DV	IC	OP AMP.	03
*		VL434500	Diode	SC527	ダイオード		02
*		VL048300	Variable Resistor	A10K RK094111	ロータリーボリューム	MIC. VOL	03
		FZ005060	Semiconductive Cera. Cap.	0.1μF 16V N	半導体セラコン		01
		VF968800	Coil	SBT-0260TF 60μ	コイル		01
		VD542700	LC Filter	DSS306-93F223Z1	LCフィルター	22000p	01
		LB101870	Phone Jack	YKB21-5006	ホーンジャック	MIC	03
*		VL407800	RC Module	H8DN2448	RCモジュール		
		VA078900	Jumper Wire	0.55	ジャンパー線		
*		VK749100	Circuit Board	RA	RAシート		09
		IG001390	IC	RC4558DV	IC	OP AMP.	03
		FZ005060	Semiconductive Cera. Cap.	0.1μF 16V N	半導体セラコン		01
		VF968800	Coil	SBT-0260TF 60μ	コイル		01
		FZ005920	EMI Filter	LS MT Y223NB	LCフィルターEMI	22000p	02
		VC687500	Phone Jack	YKB21-5014 BL	ホーンジャック	AUX L, RHY L	01
		VD376100	Phone Jack	YKB21-5154 GY	ホーンジャック	AUX R, RHY R	01
*		VK749000	Circuit Board	MK	MKシート		15
		IG042500	IC	NJM4556	IC	OP AMP.	04
		IG001740	IC	TC4050BP	IC	BUFFER	03
		XA805001	IC	YM3603	IC	KBS1	09
		IF003450	Diode	1SS133	ダイオード		01
		VA093900	Zener Diode	MTZ5.1B 5.1V	ツェナーダイオード		01
		VB433900	Resistor Array	RMLS8 J 333	抵抗アレイ	33K×8	01
		HT190070	Trimmer Potentiometer	B50K 3P EVL	半固定ボリューム		02
		HT190080	Trimmer Potentiometer	B100K 3P EVL	半固定ボリューム		02
		VI307100	Monolithic Cera. Cap.	0.1μF 50V Z	積層セラコン		01
		VB935500	Ceramic Cap. Array	1000pF×7 50V Z	セラコンアレイ		01
		VD542700	LC Filter	DSS306-93F223Z1	LCフィルター	22000p	01
		VB467100	Ceramic Resonator	3.25MHz	セラミック振動子		02
		VA078900	Jumper Wire	0.55	ジャンパー線		
*		VK806400	Circuit Board	PKH	PKHシート		12
		IG001390	IC	RC4558DV	IC	OP AMP.	03
		IF003450	Diode	1SS133	ダイオード		01
		VA093900	Zener Diode	MTZ5.1B 5.1V	ツェナーダイオード		01
*		VA293500	Metal Film Resistor	10KΩ 1/4 B	金属皮膜抵抗		01
		HT370250	Trimmer Potentiometer	B50K 3P EVN	半固定ボリューム	1,3	02
		HT370270	Trimmer Potentiometer	B200K 3P EVN	半固定ボリューム	2,4	02
		VI307100	Monolithic Cera. Cap.	0.1μF 50V Z	積層セラコン		01
		VA078900	Jumper Wire	0.55	ジャンパー線		
*		VK806200	Circuit Board	PKL	PKLシート		14
		IG001740	IC	TC4050BP	IC	BUFFER	03
		XA805001	IC	YM3603	IC	KBS1	09
		IF003450	Diode	1SS133	ダイオード		01
*		VL217400	Resistor Array	RGLD5X153J	抵抗アレイ	15K×5	01
		VI307100	Monolithic Cera. Cap.	0.1μF 50V Z	積層セラコン		01
		VB935500	Ceramic Cap. Array	1000pF×7 50V Z	セラコンアレイ		01
		FZ005920	EMI Filter	LS MT Y223NB	LCフィルターEMI		02
		VB467100	Ceramic Resonator	3.25MHz	セラミック振動子		02
		VF968800	Coil	STB-0260TF 60μ	コイル		01
		VA078900	Jumper Wire	0.55	ジャンパー線		
*		VJ636200	Circuit Board	PRM	PRMシート	J	10
*		VJ636300	Circuit Board	PRM	PRMシート	U,C	11
*		VJ636400	Circuit Board	PRM	PRMシート	D,H,B,A	11
*		VJ636500	Circuit Board	PRM	PRMシート	X,M	11
		VA302800	Ceramic Cap.	0.01μF 125V	セラコン		01
*		VJ898300	Coil	SC-05-10J	コイル	1mH 5A	06
*		VK315900	Coil	TF2528S-102Y5R0	コイル	1mH 5A	06
*		VJ898200	Coil	SN10-500J	コイル	110μH 5A	04
*		VK900000	Coil	SF1-T10-50-01	コイル	110μH 5A	
		KB001280	Fuse	6.0A 250V	ヒューズ	J,X,M	02
		KB001250	Fuse	6.0A 250V	ヒューズ	U,C	02
		KB000690	Fuse	T 2.5A S 250V	ヒューズ	D,H,B,A,X,M	02
		LB201530	Fuse Holder	PC-FH1	ヒューズホルダ	2pcs (X,M:4pcs)	01
		VA078900	Jumper Wire	0.55	ジャンパー線		
*		VJ965100	Circuit Board	EXP	EXPシート	2CH	07
		VA228800	Variable Resistor	B10K RK16Y11L	ロータリーボリューム		05
*		VJ965300	Circuit Board	EXP	EXPシート	2ND	07
		VB437200	Variable Resistor	B10K RK16Y11L	ロータリーボリューム		05

*New Parts (新規部品)

ランク：Japan only

Ref. No.	Part No.	Description		部品名	Remarks	ランク
*	XI083A00	Power Transformer		電源トランス	J	19
*	XI158A00	Power Transformer		電源トランス	D,H,B,A	19
*	XI157B00	Power Transformer		電源トランス	U,C	
*	XI159A00	Power Transformer		電源トランス	X,M	19
*	VK652700	AC Cord	2P 7A 3.75m	電源コード	J	06
*	VK652900	AC Cord	2P 6A 3.75m	電源コード	H,D	06
*	VK653100	AC Cord	2P 6A 3.75m	電源コード	A	06
*	VK652800	AC Cord	UC-705-J04	電源コード	U,C	08
*	VJ959800	AC Cord	2P 6A 3.75m	電源コード	M	
*	VK653000	AC Cord	2P 6A 3.75m	電源コード	X	05
*	VJ959900	AC Cord	2P 6A 3.75m	電源コード	B	08
*	XJ227A00	Speaker	JA2130	スピーカー	Woofer	21
*	XJ228A00	Speaker	JA1816	スピーカー	Squawker	18
*	XI168A00	Speaker	2.5CM 8Ω 60W	スピーカー	Tweeter	
*	XI169B00	Speaker	12×5cm 16Ω	スピーカー	Monitor	08
*	VJ437000	Floppy Disk Drive	1M/2M BL 3.5"	FDD		31
*	VK861900	LCD	DMF5019NY-LY3	液晶ディスプレイ		11
	VC843500	Push Switch	SDDLB1	プッシュスイッチ	POWER	03
	VA228500	Micro Switch	SPPB13001A	マイクロスイッチ	EXP	01

*New Parts (新規部品)

ランク：Japan only

■POWER AMPLIFIER（電源アンプ）

Ref. No.	Part No.	Description		部品名	Remarks	ランク
*	VJ963800	Power Amplifier Unit		電源アンプ	J,D,B,A,X,M	36
*	VJ961100	Power Amplifier Unit		電源アンプ	H (EL-90)	36
*	VJ963700	Power Amplifier Unit		電源アンプ	U	37
*	VK965700	Power Amplifier Unit		電源アンプ	C	37
*	VL453600	FU Unit		FUユニット	U,C only	18
		< Power Amplifier Unit >		<電源アンプ>		
	--	Chassis		電源シャーシ		
	--	Heat Sink		放熱器		
	AA058660	Holder, Transistor		トランジスターホルダ	STK4152-2	01
	VH605100	Holder, PT		PTホルダー	RBV-602/2SA1451	01
	--	Circuit Board	PU	PUシート		
*	EP600070	Bind Head Screw	3.0X8 ZMC2Y	+バインドSタイト	9pcs	01
	ED030126	Bind Head Screw	3.0X12 ZMC2Y	+バインド小ネジ	3pcs	01
	ED030166	Bind Head Screw	3.0X16 ZMC2Y	+バインド小ネジ	6pcs	01
	--	Angle		アングル	U only (2pcs)	
	ED030066	Bind Head Screw	3.0X6 ZMC2Y	+バインドSタイト	U only (2pcs)	01
	--	Circuit Board	PU	PUシート		
	IG076800	IC	NJM4558S	IC	OP AMP.	03
*	XI163A00	IC	STK4152-2	IC	30W P.AMP	04
	XD853A00	IC	NJM7815FA	IC	15V REGULATOR	03
	XD854A00	IC	NJM7915FA	IC	15V REGULATOR	03
*	XI164A00	IC	SI-3050C	IC	REGULATOR 5V	
*	XI165A00	IC	M5237L	IC	REGULATOR	02
	XF751A00	IC	M5227P	IC	EQUALIZER	04
*	VJ828100	Transistor	2SA1451 O.Y	トランジスタ		04
*	VJ926400	Transistor	2SC1815 (GR)	トランジスタ		
	VB481900	Diode	11ES4	ダイオード		01
	VI234100	Diode Bridge	RBV-602 6A 200V	ダイオードブリッジ		03
*	VB405800	Zener Diode	MTZ15B 15.0V	ツェナーダイオード		01
	VC742500	Metal Oxide Film Resistor	10Ω 1W J	酸化金属皮膜抵抗		01
	VC759500	Metal Oxide Film Resistor	220Ω 2W J	酸化金属皮膜抵抗		01
*	VC760500	Metal Oxide Film Resistor	470Ω 2W J	酸化金属皮膜抵抗		01
*	VC747400	Metal Oxide Film Resistor	1.0KΩ 1W J	酸化金属皮膜抵抗		01
*	VC748400	Metal Oxide Film Resistor	2.2KΩ 1W J	酸化金属皮膜抵抗		01
	HW095100	Fuse Resistor	100Ω 1/4 J	ヒューズ抵抗		01
*	VJ828900	Fuse Resistor	3.3Ω 1W J	ヒューズ抵抗		01
*	VL130300	Fuse Resistor	0.47Ω 1W J	ヒューズ抵抗	J,U,C,D,B,A,X,M	01
	UJ828220	Electrolytic Cap.	220μF 10V	ケミコン		01
	UJ848220	Electrolytic Cap.	220μF 25V	ケミコン		01
	UJ819100	Electrolytic Cap.	1000μF 6.3V	ケミコン		01
*	VL232300	Electrolytic Cap.	2200μF 25V	ケミコン		03
*	VL232400	Electrolytic Cap.	3300μF 35V	ケミコン		04
*	VL276200	Electrolytic Cap.	10000μF 10V	ケミコン		04
	VA302600	Ceramic Cap.	0.01μF 500V P	セラコン		01
	VC694800	Semiconductive Cera. Cap.	0.1μF 25V Z	半導体セラコン		01
	KC001940	Relay	DH24D2-0T(M)24V	リレー		05
*	VK901600	Fuse	T 10.0A S 250V	ヒューズ	H only	03
	ED030086	Bind Head Screw	3.0X8 ZMC2Y	+バインド小ネジ	6pcs	01
	LB201530	Fuse Holder	PC-FH1	ヒューズホルダ	H only (2pcs)	01
	--	Heat Sink		放熱器		
	--	Sheet		放熱シート	Power	
	--	Sheet		放熱シート	Regulator	
	VA078900	Jumper Wire	0.55	ジャンパー線		
	--	Connector Assembly	6P-100	SCN－SCN束線	BW1,BW2	
*	VL453600	<FU Unit>		<FUユニット>	U,C only	18
	--	Chassis, FU		FUシャーシ		
	--	Insulation Sheet	NF-77	絶縁紙		
	--	Circuit Board	FU	FUシート	U,C only	
	--	Connector Assembly	8P	VH－VH束線	FU_CN22-PU_CN11	
	ED030066	Bind Head Screw	3.0X6 ZMC2Y	+バインドSタイト	4pcs	01
	--	Circuit Board	FU	FUシート	U,C only	
	KB001390	Fuse	10.0A 250V	ヒューズ	1pc.	03
	KB001520	Fuse	7.0A 125V	ヒューズ	2pcs	02
	LB201530	Fuse Holder	PC-FH1	ヒューズホルダ		01

*New Parts（新規部品）

ランク：Japan only

■ OVERALL ASSEMBLY（総組立）

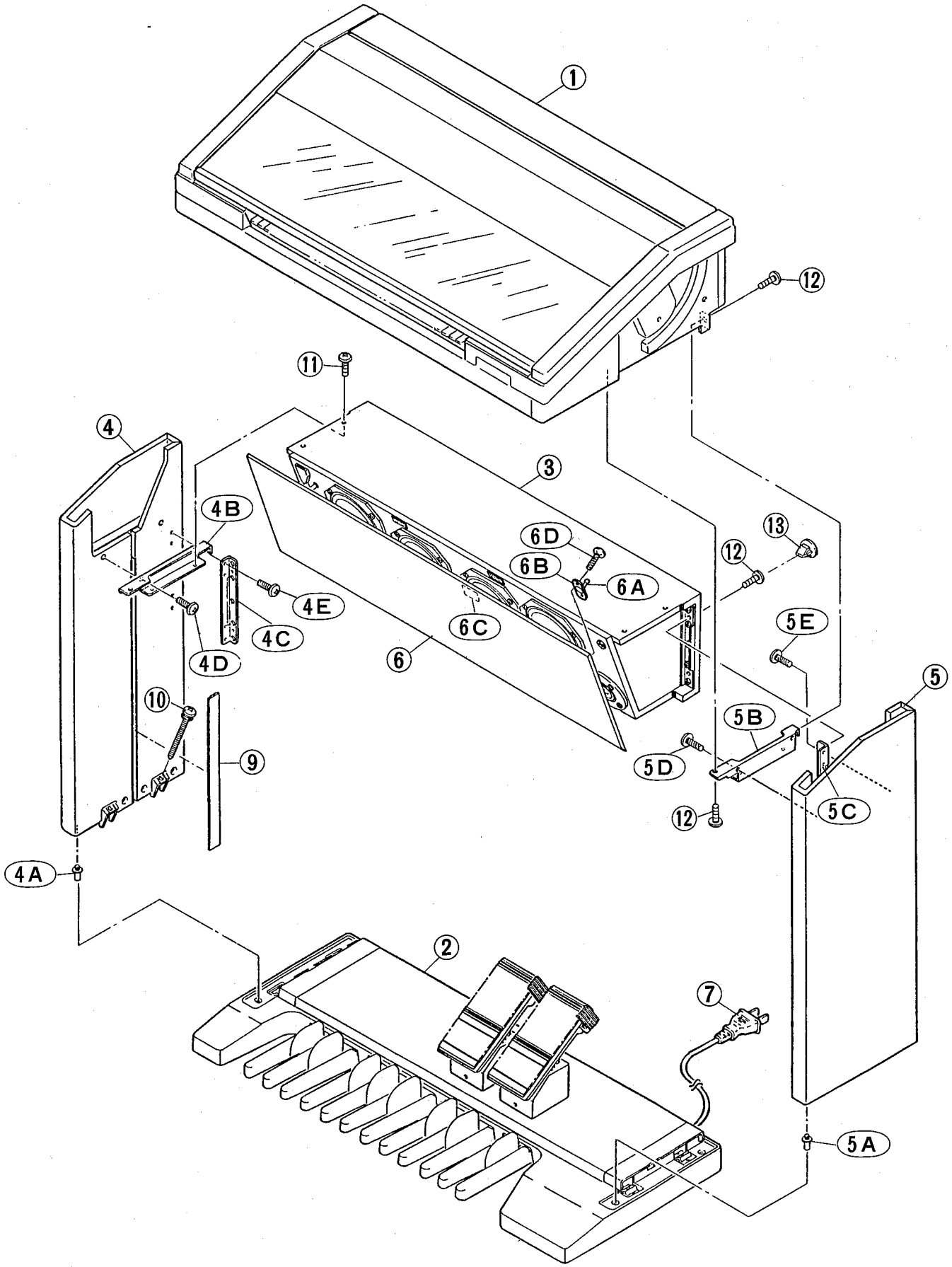

● Accessories(付属品)

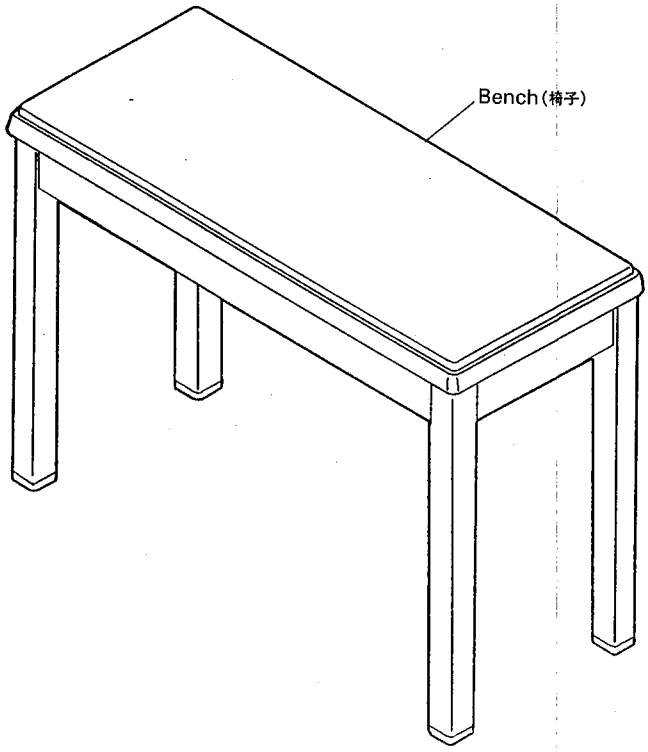

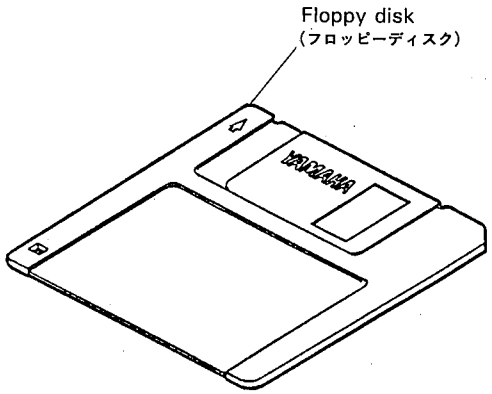

	Ref. No.	Part No.	Description		部品名	Remarks	ランク
			<Overall Assembly>		<総組立>	(EL-90)	
	1	--	Upper Unit		上部ユニット		
	2	--	Pedal Unit		ペダルユニット		
	3	--	Speaker Box Unit		ｽﾋﾟｰｶｰﾎﾞｯｸｽﾕﾆｯﾄ		
*	4	VK941500	Side Board Unit	Left	側板(左)ユニット		25
*	4A	VJ916000	Pin		ピン	2pcs	01
*	4B	VJ907200	Rail, Speaker	Left	SP取付レール(左)	1pc.	07
*	4C	VJ907500	Angle Bracket, Speaker		SP固定アングル	1pc.	04
*	4D	VE632500	Trus Head Screw	5.0X22 BL CE	+トラスTPエバCE	3pcs	01
*	4E	EP040220	Bind Head Tapping Screw	4.0X25 ZMC2Y	+バインドTP1種	4pcs	01
*	5	VK941800	Side Board Unit	Right	側板(右)ユニット		25
*	5A	VJ916000	Pin		ピン	2pcs	01
*	5B	VJ907300	Rail, Speaker	Right	SP取付レール(右)	1pc.	07
*	5C	VJ907500	Angle Bracket, Speaker		SP固定アングル	1pc.	04
*	5D	VE632500	Trus Head Screw	5.0X22 BL CE	+トラスTPエバCE	3pcs	01
*	5E	EP040220	Bind Head Tapping Screw	4.0X25 ZMC2Y	+バインドTP1種	4pcs	01
*	6	VJ934100	Grill Assembly		グリルAss'y		17
	6A	CB069610	Strike		ストライク	3pcs	01
	6B	CB069620	Support		サポート	3pcs	01
*	6C	VL402300	Dual Lock	BL	ファスナー		
*	6D	VA214700	Flat Head Tapping Screw	3.0X10 ZMC2BL	+皿TP1種	6pcs	01
*	7	VK652700	AC Cord	2P 7A 3.75m	電源コード	J	06
*	7	VK652900	AC Cord	2P 6A 3.75m	電源コード	H,D	06
*	7	VK653100	AC Cord	2P 6A 3.75m	電源コード	A	06
*	7	VK652800	AC Cord	UC-705-J04	電源コード	C	08
*	7	VJ959800	AC Cord	2P 6A 3.75m	電源コード	M	
*	7	VK653000	AC Cord	2P 6A 3.75m	電源コード	X	05
*	7	VJ959900	AC Cord	2P 6A 3.75m	電源コード	B	08
*	9	VJ949500	Cap	BR	キャップ	2pcs	04
*	10	VK023100	Pan Head Screw	5.0X40 ZMC2Y	+ナベ尖リ先小ネジ	4pcs	01
*	11	VL007300	Trus Head Screw	5.0X25	+トラス小ネジ	4pcs	02
	12	ED350126	Bind Head Screw	5.0X12 ZMC2BL	+バインド小ネジ	8pcs	01
	13	VE636200	Cap	φ12	穴キャップ	4pcs	01
*		VL019100	Screw Set	3-M5	ネジセット		
*		VE638200	Cap Set	VE63620×4	穴キャップセット		02
			Accessories		付属品		
		--	Bench		椅子		
*		VK946800	Floppy Disk, Registration	3.5" 1000K	ﾚｼﾞｽﾄﾒﾆｭｰﾃﾞｨｽｸ	J	10
*		VK946900	Floppy Disk, Registration	3.5" 1000K	ﾚｼﾞｽﾄﾒﾆｭｰﾃﾞｨｽｸ	U,C,H,D,B,A,X,M	10

*New Parts (新規部品)

ランク：Japan only

■ UPPER UNIT（上部ユニット）

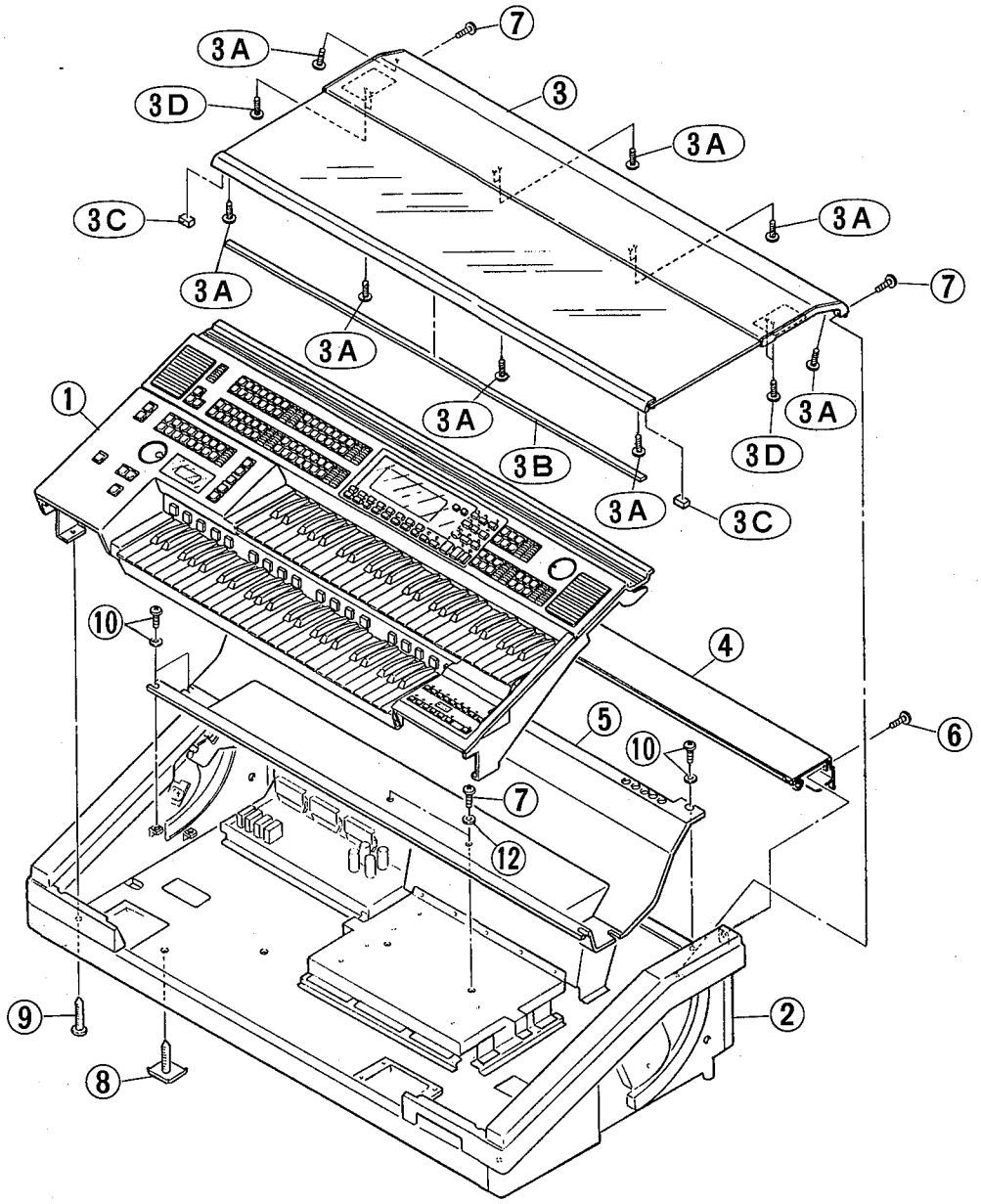

	Ref. No.	Part No.	Description		部品名	Remarks	ランク
			<Upper Unit>		<上部ユニット>	EL-90	
	1	--	Panel Assembly		パネルアセンブリー		
	2	--	Panel Case Unit		パネルケースユニット		
*	3	VJ950400	Cover Assembly		蓋アセンブリー		
*	3A	VA819100	Bind Head Tapping Screw	3.0X6 ZMC2BL	＋バインドＰタイト	20pcs	
*	3B	VJ955600	Cushion Tape	BL	クッションテープ		
*	3C	VJ955500	Button	BL	角ボタン	2pcs	
*	3D	VA819100	Bind Head Tapping Screw	3.0X6 ZMC2BL	＋バインドＰタイト	4pcs	
*	4	VJ950600	Top Board Assembly		屋根アセンブリー		
*	5	VL655600	Dust Proof Cover		ダストカバー	U,C	
*	5	VJ928100	Dust Proof Cover		ダストカバー	J,H,D,B,A,X,M	
*	6	VJ950800	Screw	4.0X10	平小ネジ	2pcs	
*	7	VI693100	Bind Head Screw	4.0X8 ZMC2BL	＋バインドＳタイト	6pcs	
	8	VD878100	Pan Head Screw	5.0X20 ZMC2BL	＋ナベ尖リ先小ネジ	4pcs with ｶｸｻﾞ	01
*	9	VJ964500	Bind Head Screw	5.0X20 ZMC2BL	＋バインド尖先小ネジ	3pcs	
*	10	VD090100	Bind Head Screw	3.0X8 ZMC2BL	＋バインドＳタイト	9pcs with PW	
	12	EV220500	Flat Washer	φ5.0 ZMC2Y	平座金みがき丸	2pcs	
		--	Adhesive Tape	12X50	粘着テープ		

*New Parts（新規部品）

ランク：Japan only

■PANEL ASSEMBLY（パネルアセンブリー）

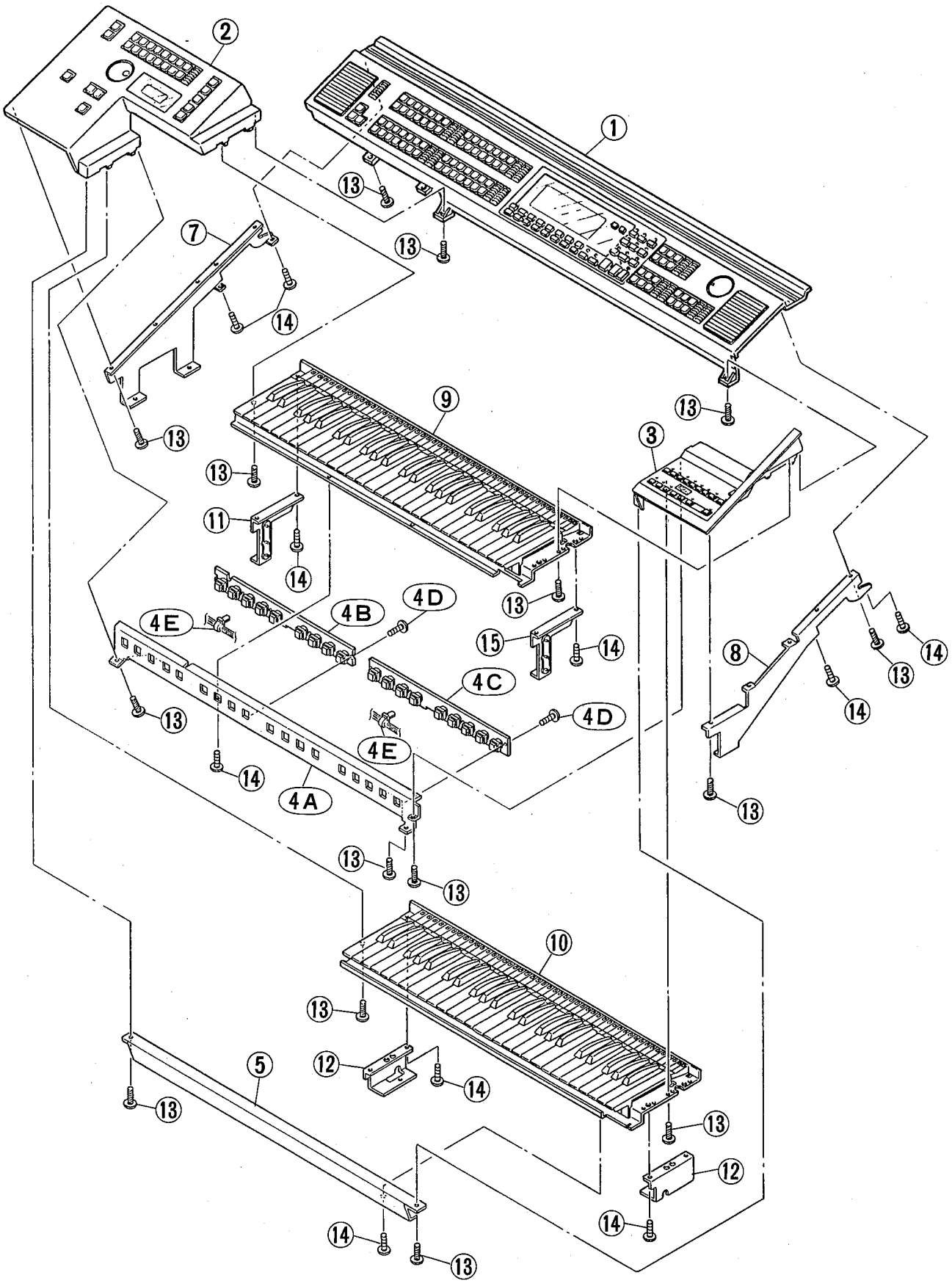

	Ref. No.	Part No.	Description		部品名	Remarks	ランク
			<Panel Assembly>		<パネルアセンブリー>	EL-90	
	1	--	Center Panel Unit		センターパネルユニット		
	2	--	Left Panel Unit		レフトパネルユニット		
	3	--	Right Panel Unit		ライトパネルユニット		
	4	--	Lower Front Rail, Assembly		口金（U）Ass'y		
*	4A	VJ924900	Front Rail	(U)	口金（U）		10
*	4B	VJ332100	Circuit Board	PS1	PS1シート		18
*	4C	VJ332200	Circuit Board	PS2	PS2シート		18
*	4D	VA078100	Bind Head Screw	3.0X5 ZMC2Y	+バインドSタイト	9pcs	01
	4E	CB069250	Cord Clamper	BK-1	束線止め	7pcs	01
*	5	VJ924600	Lower Front Rail		口金（L）		06
*	7	VJ502300	Side Support	Left	サイドサポート（左）	1pc.	07
*	8	VJ502400	Side Support	Right	サイドサポート（右）	1pc.	07
*	9	VK960700	Keyboard Assembly	C49 K12	FS鍵盤Ass'y	UK	34
*	10	VK960600	Keyboard Assembly	C49 K12	FS鍵盤Ass'y	LK	33
*	11	VJ496200	Support	Upper	サポート（上）	1pc.	05
*	12	VJ499900	Support	Lower	サポート（下）	2pcs	04
*	13	EP600270	Bind Head Tapping Screw	3.0X10 ZMC2Y	+バインドPタイト	28pcs	01
*	14	EP600530	Bind Head Screw	3.0X8 ZMC2BL	+バインドSタイト	18pcs	01
*	15	VL896500	Support Assembly	Upper	サポート（上）Ass'y	1pc.	
		--	Connector Assembly	12P-1000	KRD－KRD束線	DM_CN5-LK_CN1	
		--	Connector Assembly	12P-1200	KRD－KRD束線	DM_CN2-UK_CN1	
		--	Connector Assembly	10P-300	KRD－KRD束線	PN1_CN4-PS1_CN4	
		--	Connector Assembly	11P-650	KRD－KRD束線	PN1_CN5-PS2_CN2	
		--	Connector Assembly	9P-320-350	KRD3束線	PN1_CN9-PS1,PS2	

*New Parts（新規部品）

ランク：Japan only

■ CENTER PANEL UNIT（センターパネルユニット）

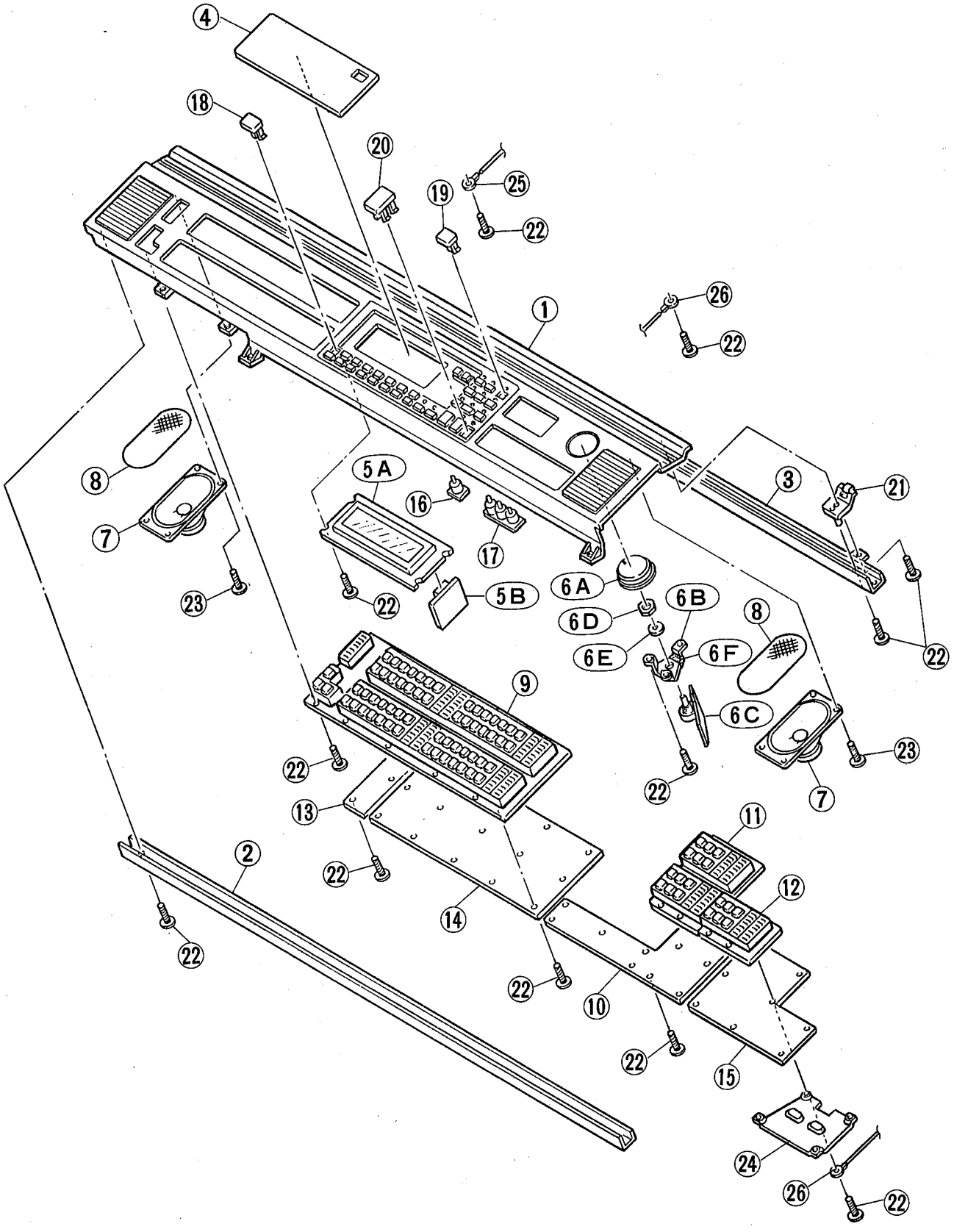

	Ref. No.	Part No.	Description		部品名	Remarks	ランク
			<Center Panel Unit>		<ｾﾝﾀｰﾊﾟﾈﾙﾕﾆｯﾄ>	EL-90	
*	1	VL647900	Center Panel		センターパネル	U	14
*	1	VK799600	Center Panel		センターパネル	J,C,H,D,B,A,X,M	15
*	2	VK825100	Rail, Front		補強レール（前）		06
*	3	VJ916600	Rail, Rear		補強レール（後）		06
*	4	VK800900	Cover, LCD		ＬＣＤカバー		10
	5	--	Module, LCD Circuit Board		LCDｼｰﾄﾓｼﾞｭｰﾙ		
*	5A	VK861900	LCD	DMF5019NY-LY3	液晶ディスプレイ		11
*	5B	VK749700	Circuit Board	LCD	ＬＣＤシート		13
	6	--	MVR Unit		ＭＶＲユニット		
*	6A	VK784100	Volume Knob		ボリュームツマミ	MASTER VOLUME	02
	6B	VC873000	MA. VR Chassis		ＭＡ．ＶＲシャーシ		01
*	6C	VK645900	Circuit Board	MVR	ＭＶＲシート		10
*	6D	VD051700	Hexagonal Nut	φ7.0 ZMC2Y	特殊六角ナット	1pc.	01
	6E	VD051800	Flat Washer	7X12X0.5 ZMC2Y	特殊平座金	1pc.	01
*	6F	VL402400	Cushion	GY	クッション	1pc.	
*	7	XI169B00	Speaker	12×5cm 16Ω	スピーカー	Monitor	08
*	8	VJ956400	Speaker Cloth		スピーカークロス	Monitor	02
	9	--	Switch Escutcheon Assembly	(A)	スイッチ枠（Ａ）Ａss'y		
*	10	VK645700	Circuit Board	CP3	ＣＰ３シート		12
	11	--	Switch Escutcheon Assembly	(B)	スイッチ枠（Ｂ）Ａss'y		
	12	--	Switch Escutcheon Assembly	(C)	スイッチ枠（Ｃ）Ａss'y		
*	13	VK645100	Circuit Board	CP1	ＣＰ１シート		09
*	14	VK645400	Circuit Board	CP2	ＣＰ２シート		29
*	15	VK645800	Circuit Board	CP4	ＣＰ４シート		21
*	16	VJ862800	LED Lens	(1)	ＬＥＤレンズ単連	2pcs	02
*	17	VJ803100	LED Lens	(3)	ＬＥＤレンズ３連	4pcs	02
*	18	VJ803700	Button		メニューボタン	DATA CONTROL	02
*	19	VJ404100	Switch Button	Small BL	スイッチボタン（小）	DATA CONTROL	02
*	20	VJ404000	Switch Button	Large	スイッチボタン（大）	DISPLAY SELECT	02
*	21	VJ956600	Roller Unit		ローラーユニット	2pcs	04
*	22	EP600520	Pan Head Tapping Screw	3.0X8 ZMC2Y	＋ナベＰタイト	86pcs	01
*	23	EP640500	Bind Head Tapping Screw	4.0X10 ZMC2Y	＋バインドＰタイト	8pcs	01
*	24	VL428600	Angle Bracket, CP4	CP4	ＣＰシート補強金具		04
	25	--	Earth Wire	L=170	アース線	1pc.	
	26	--	Earth Wire	L=90	アース線	1pc.	
		--	Connector Assembly	2P-750	ＶＨ－ＶＨ束線	AUX_CN2-CP2_CN3	
		--	Connector Assembly	4P	モニター ＳＰ束線	PU_CN16-M.SP.	
		--	Connector Assembly	9P-100	ＫＲＤ－ＫＲＤ束線	CP1_CN1-CP2_CN5	
		--	Connector Assembly	8P-1100	ＫＲＤ－ＫＲＤ束線	DM_CN7-LCD_CN1	
		--	Connector Assembly	11P-1100	ＫＲＤ－ＫＲＤ束線	DM_CN6-LCD_CN2	
		--	Connector Assembly	8P-1300	ＫＲＤ－ＫＲＤ束線	ANG_CN3-MVR_CN1	
		--	Connector Assembly	5P-1600	ＫＲＤ－ＫＲＤ束線	DM_CN11-LCD_CN3	
		--	Connector Assembly	6P-1000～400	ＫＲＤ５束線	PU_CN12=CP4_CN2	
		--	Connector Assembly	10P-1000～450	ＫＲＤ５束線	DM_CN1=PN4_CN1	

*New Parts（新規部品）

ランク：Japan only

■LEFT PANEL UNIT（レフトパネルユニット）

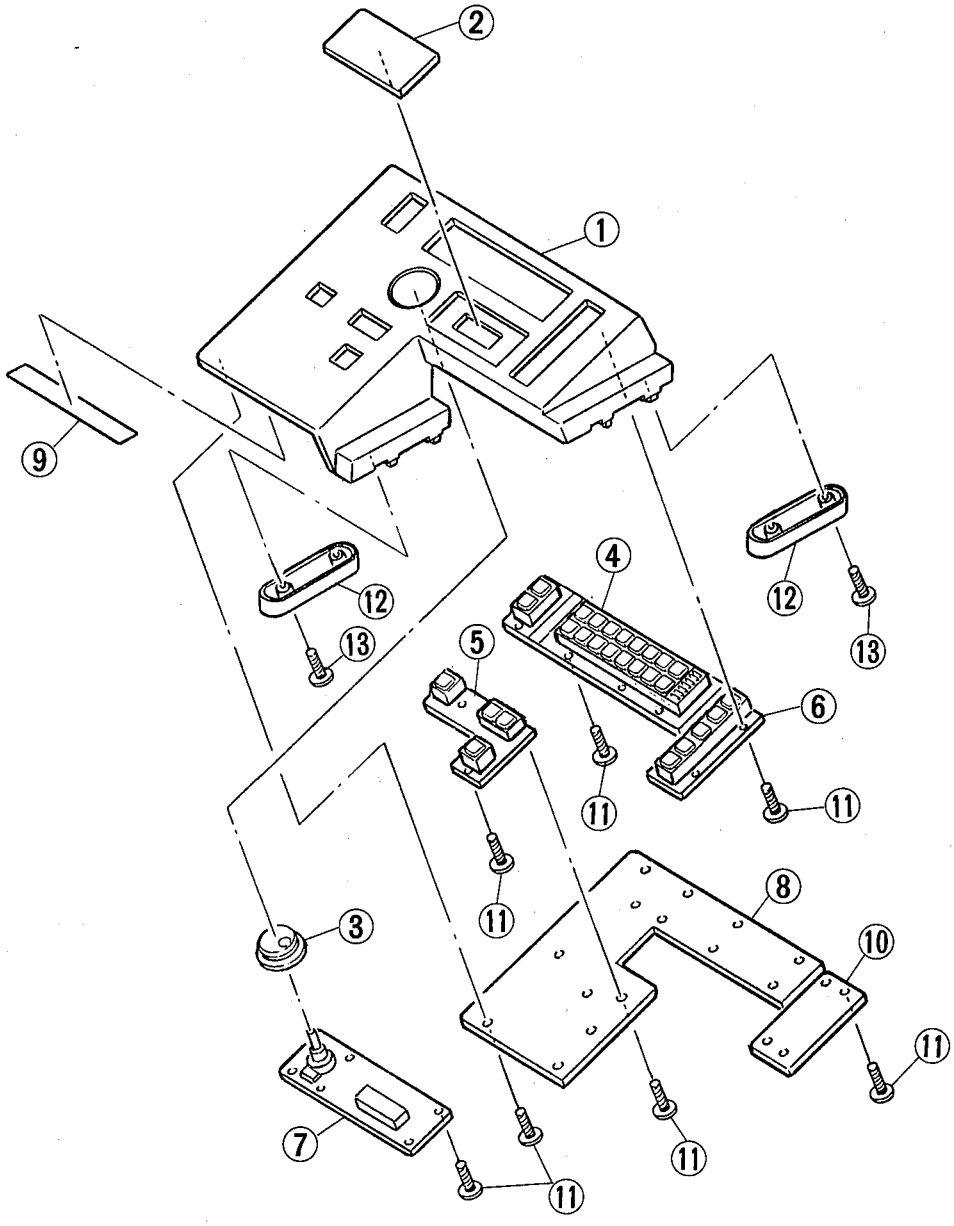

	Ref. No.	Part No.	Description		部品名	Remarks	ランク
			<Left Panel Unit>		<レフトパネルユニット>	EL-90	
*	1	VK799400	Left Panel		レフトパネル		10
*	2	VK800800	Cover, Tempo		テンポカバー	TEMPO, BAR/BEAT	08
*	3	VK784300	Knob, Tempo		テンポツマミ	TEMPO	02
	4	--	Switch Escutcheon Assembly	(D)	スイッチ枠(D)Ass'y		
	5	--	Switch Escutcheon Assembly	(E)	スイッチ枠(E)Ass'y		
	6	--	Switch Escutcheon Assembly	(F)	スイッチ枠(F)Ass'y		
*	7	VK645200	Circuit Board	PN2	PN2シート		14
*	8	VK644800	Circuit Board	PN1	PN1シート		23
	9	--	Spacer		不織布	1pc.	
*	10	VK644900	Circuit Board	PN3	PN3シート		08
*	11	EP600520	Pan Head Tapping Screw	3.0X8 ZMC2Y	+ナベPタイト	40pcs	01
*	12	VJ493800	Bracket		ブラケット	2pcs	02
*	13	EP600270	Bind Head Tapping Screw	3.0X10 ZMC2Y	+バインドPタイト	4pcs	01
		--	Connector Assembly	7P-900	KRD－KRD東線	ANG_CN1-PN1_CN3	

*New Parts（新規部品）

ランク：Japan only

■RIGHT PANEL UNIT（ライトパネルユニット）

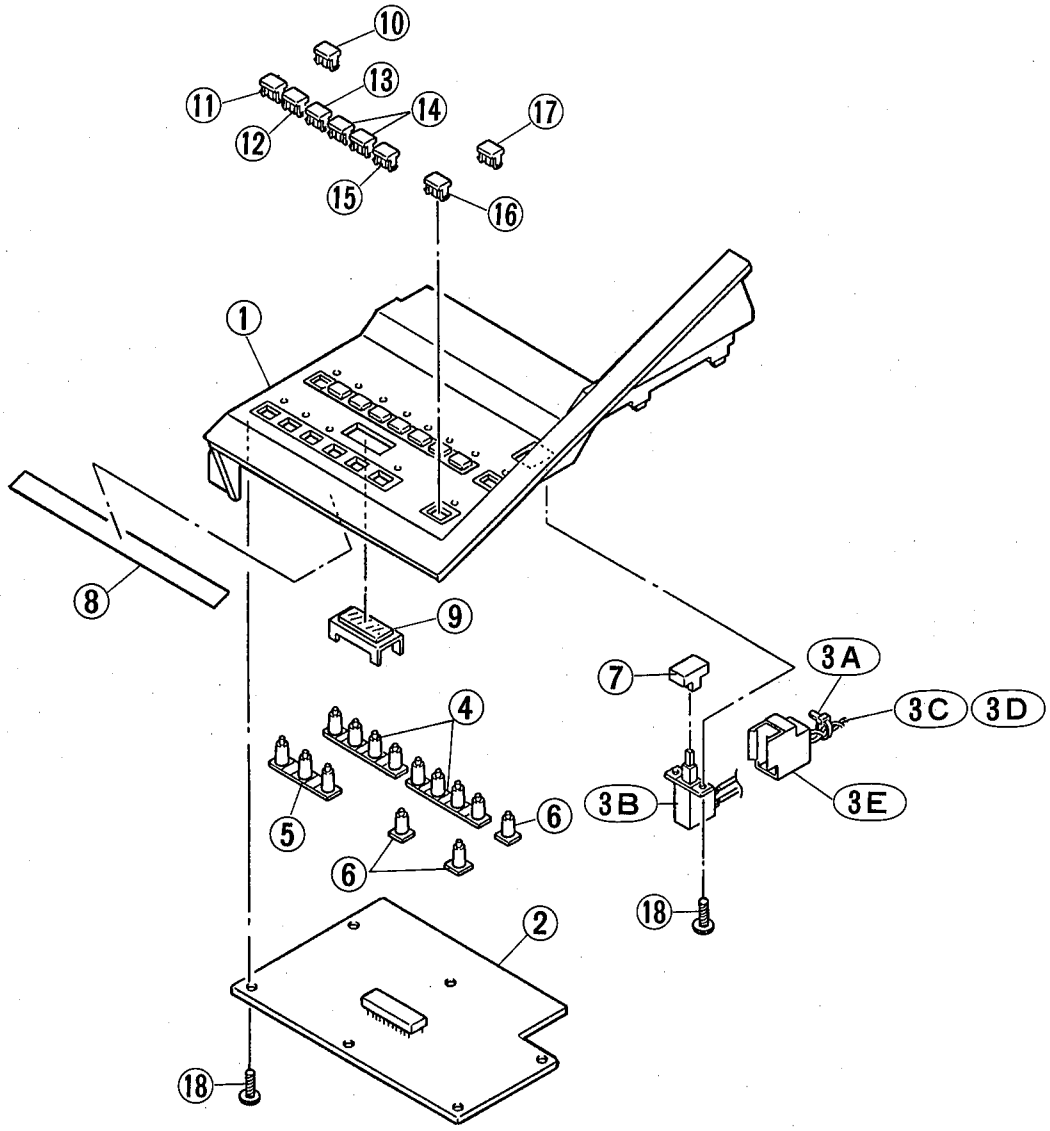

	Ref. No.	Part No.	Description		部品名	Remarks	ランク
			<Right Panel Unit>		<ﾗｲﾄﾊﾟﾈﾙﾕﾆｯﾄ>	EL-90	
*	1	VK799200	Right Panel		ライトパネル		09
*	2	VK645000	Circuit Board	PN4	ＰＮ４シート		19
	3	--	Cable, Power Switch		ＰＳＷ束線		
	3A	CB069250	Cord Clamper	BK-1	束線止め	3pcs	01
	3B	VC843500	Push Switch	SDDLB1	プッシュスイッチ	POWER	03
	3C	--	Wire	GY	ビニール線		
	3D	--	Wire	WH	ビニール線		
	3E	CB049980	Switch Cover	BL	パワースイッチカバー	POWER	01
*	4	VK783700	LED Lens	(4)	ＬＥＤレンズ（４連）	2pcs	02
* *	5	VK936900	LED Lens	(3)	ＬＥＤレンズ（３連）	1pc.	02
* *	6	VK937000	LED Lens	(1)	ＬＥＤレンズ（単連）	3pcs	
*	7	VK782100	Button, Power Switch		ﾊﾟﾜｰｽｲｯﾁﾎﾞﾀﾝ	POWER	
	8	--	Spacer		不織布	1pc.	
*	9	VJ803800	Lens		レンズ	1pc.	02
* *	10	VL253100	Switch Button	(S) BL	スイッチボタン（Ｓ）	8pcs SONG	02
* *	11	VK910300	Switch Button	Small	ＳＷボタン（小）	PAUSE	03
* *	12	VK910400	Switch Button	Small	ＳＷボタン（小）	STOP	03
* *	13	VK910500	Switch Button	Small	ＳＷボタン（小）	PLAY	03
* *	14	VK910600	Switch Button	Small	ＳＷボタン（小）	FF,REW/TEMPO +-	03
* *	15	VK910700	Switch Button	Small	ＳＷボタン（小）	RECORD/FORMAT	03
* *	16	VL263400	Switch Button	(S) GY	スイッチボタン（Ｓ）	CUSTOM PLAY	02
* *	17	VJ404100	Switch Button	Small BL	スイッチボタン（小）	SHIFT	02
*	18	EP600520	Pan Head Tapping Screw	3.0X8 ZMC2Y	＋ナベＰタイト	8pcs	01

*New Parts（新規部品）

ランク：Japan only

■ SWITCH ESCUTCHEON Ass'y (A)（スイッチ枠Ass'y(A)）

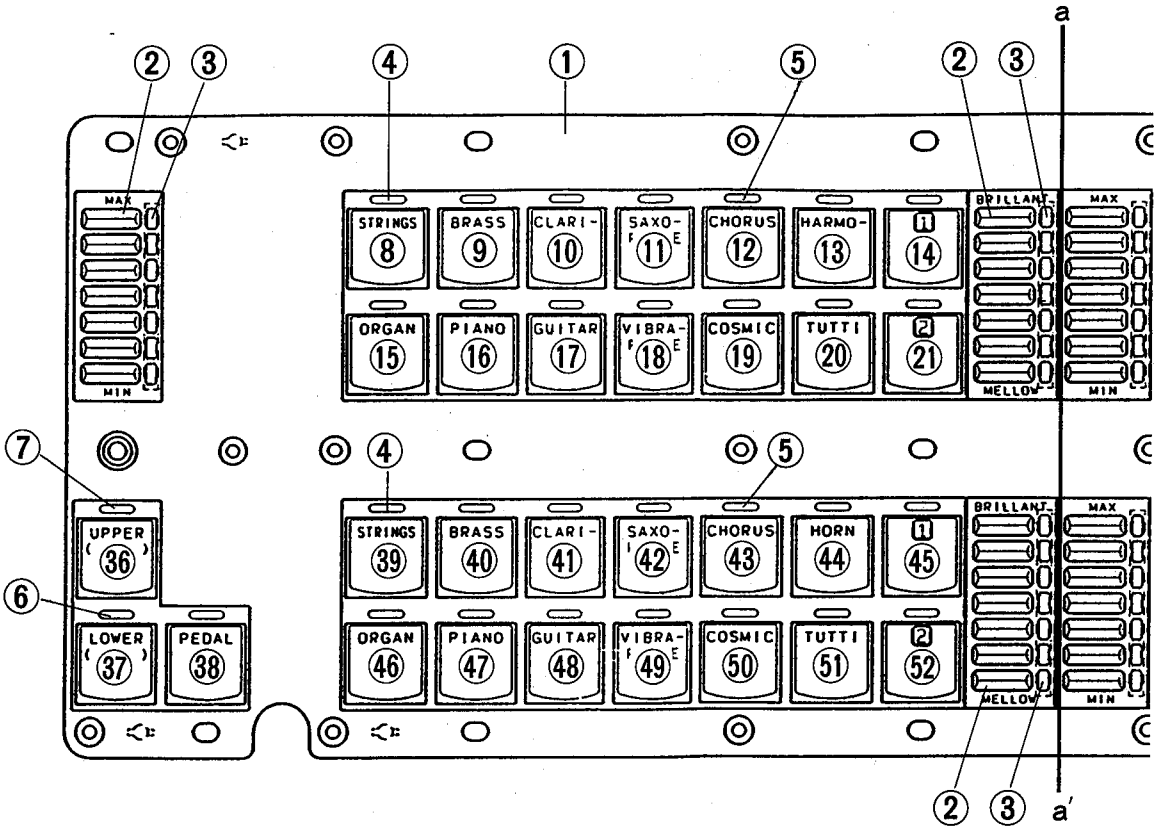

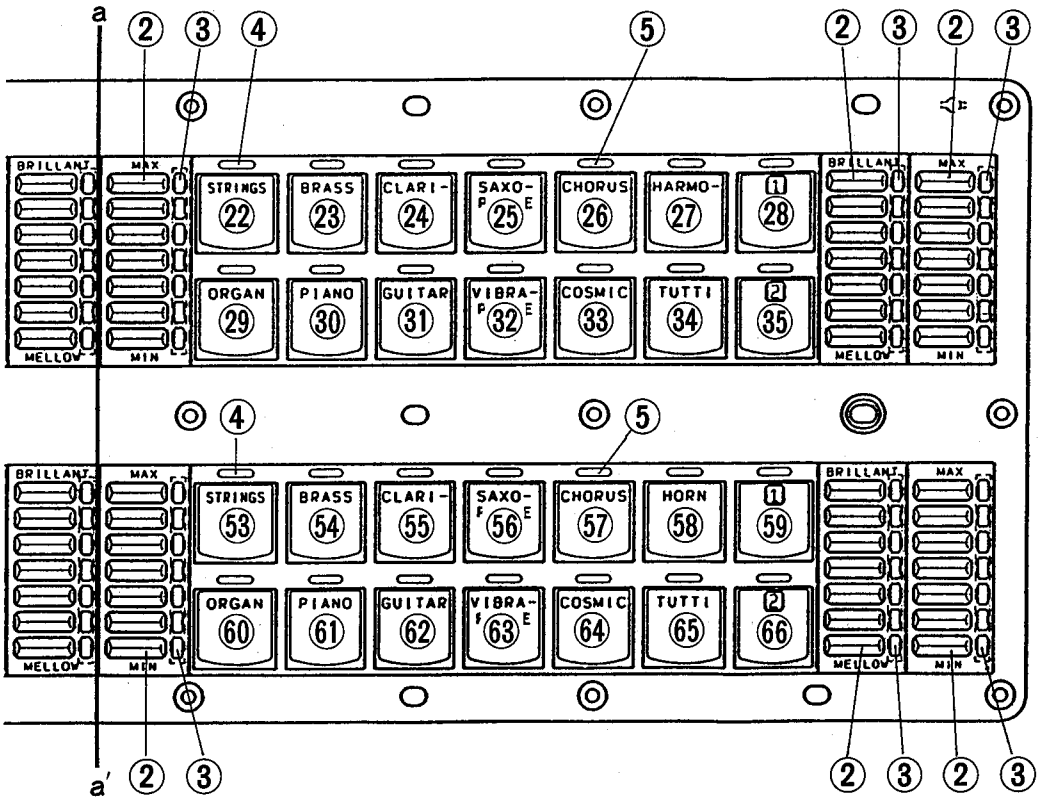

	Ref. No.	Part No.	Description		部品名	Remarks	ランク
			<Switch Escutcheon Ass'y>	(A)	<スイッチ枠(A)Ass'y>	EL-90	
*	1	VK798800	Escutcheon	(A)	スイッチ枠（A）		
* *	2	VK784400	Volume Button		ボリュームボタン	63pcs	02
* *	3	VK783300	Volume Lens		ボリュームレンズ	9pcs	02
* *	4	VK786900	Lens		音色レンズ（４連）	8pcs	
* *	5	VK787000	Lens		音色レンズ（３連）	8pcs	02
* *	6	VK787100	Lens		音色レンズ（２連）	1pc.	02
* *	7	VK787200	Lens		音色レンズ（単連）	1pc.	02
* *	8	VK921600	Button	OR	ボタン	STRINGS	
* *	9	VK921700	Button	OR	ボタン	BRASS	
* *	10	VK921800	Button	OR	ボタン	CLARI-NET	
* *	11	VK921900	Button	OR	ボタン	SAXO-PHONE	
* *	12	VK922000	Button	OR	ボタン	CHORUS	
* *	13	VK922100	Button	OR	ボタン	HARMO-NICA	
* *	14	VK922200	Button	OR	ボタン	1	
* *	15	VK922300	Button	OR	ボタン	ORGAN	
* *	16	VK922400	Button	OR	ボタン	PIANO	
* *	17	VK922500	Button	OR	ボタン	GUITAR	
* *	18	VK922600	Button	OR	ボタン	VIBRA-PHONE	
* *	19	VK922700	Button	OR	ボタン	COSMIC	
* *	20	VK922800	Button	OR	ボタン	TUITTI	
* *	21	VK922900	Button	OR	ボタン	2	
* *	22	VK923000	Button	YE	ボタン	STRINGS	
* *	23	VK923100	Button	YE	ボタン	BRASS	
* *	24	VK923200	Button	YE	ボタン	CLARI-NET	
* *	25	VK923300	Button	YE	ボタン	SAXO-PHONE	
* *	26	VK923400	Button	YE	ボタン	CHORUS	
* *	27	VK923500	Button	YE	ボタン	HARMO-NICA	
* *	28	VK923600	Button	YE	ボタン	1	
* *	29	VK923700	Button	YE	ボタン	ORGAN	
* *	30	VK923800	Button	YE	ボタン	PIANO	
* *	31	VK923900	Button	YE	ボタン	GUITAR	
* *	32	VK924000	Button	YE	ボタン	VIBRA-PHONE	
* *	33	VK924100	Button	YE	ボタン	COSMIC	
* *	34	VK924200	Button	YE	ボタン	TUTTI	
* *	35	VK924300	Button	YE	ボタン	1	
* *	36	VK925200	Button	GY	ボタン	UPPER(KNEE)	
* *	37	VK925300	Button	GY	ボタン	LOWER(KNEE)	
* *	38	VK925400	Button	GY	ボタン	PEDAL	
* *	39	VK925500	Button	VI	ボタン	STRINGS	
* *	40	VK925700	Button	VI	ボタン	BRASS	
* *	41	VK925800	Button	VI	ボタン	CLARI-NET	
* *	42	VK925900	Button	VI	ボタン	SAXO-PHONE	
* *	43	VK926000	Button	VI	ボタン	CHORUS	
* *	44	VK926100	Button	VI	ボタン	HORN	
* *	45	VK926200	Button	VI	ボタン	1	
* *	46	VK926300	Button	VI	ボタン	ORGAN	
* *	47	VK926400	Button	VI	ボタン	PIANO	
* *	48	VK926500	Button	VI	ボタン	GUITAR	
* *	49	VK926600	Button	VI	ボタン	VIBRA-PHONE	
* *	50	VK926700	Button	VI	ボタン	COSMIC	
* *	51	VK926800	Button	VI	ボタン	TUTTI	
* *	52	VK926900	Button	VI	ボタン	2	
* *	53	VK927000	Button	BE	ボタン	STRINGS	
* *	54	VK927100	Button	BE	ボタン	BRASS	
* *	55	VK927200	Button	BE	ボタン	CLARI-NET	
* *	56	VK927300	Button	BE	ボタン	SAXO-PHONE	
* *	57	VK927400	Button	BE	ボタン	CHORUS	
* *	58	VK927500	Button	BE	ボタン	HORN	
* *	59	VK927600	Button	BE	ボタン	2	
* *	60	VK927700	Button	BE	ボタン	ORGAN	
* *	61	VK927800	Button	BE	ボタン	PIANO	
* *	62	VK927900	Button	BE	ボタン	GUITAR	
* *	63	VK928000	Button	BE	ボタン	VIBRA-PHONE	
* *	64	VK928100	Button	BE	ボタン	COSMIC	
* *	65	VK928200	Button	BE	ボタン	TUTTI	
*	66	VK928300	Button	BE	ボタン	2	

*New Parts（新規部品）

ランク：Japan only

■ SWITCH ESCUTCHEON Ass'y (B)/(C) (スイッチ枠Ass'y(B)/(C))

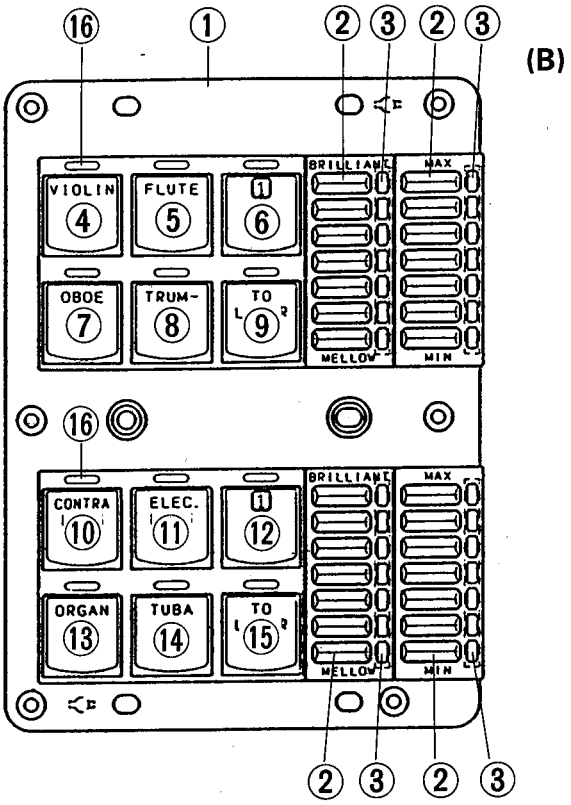

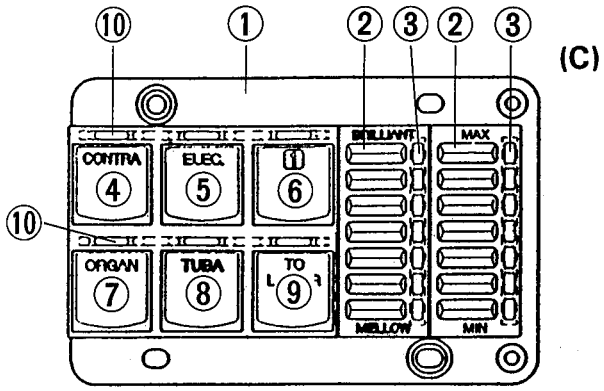

	Ref. No.	Part No.	Description		部品名	Remarks	ランク
			<Switch Escutcheon Ass'y>	(B)	<スイッチ枠(B)Ass'y>	EL-90	
*	1	VK798900	Escutcheon	(B)	スイッチ枠（B）		
*	2	VK784400	Volume Button		ボリュームボタン	28pcs	02
*	3	VK783300	Volume Lens		ボリュームレンズ	4pcs	02
*	4	VK924400	Button	RE	ボタン	VIOLIN	
*	5	VK924600	Button	RE	ボタン	FLUTE	
*	6	VK924700	Button	RE	ボタン	1	
*	7	VK924800	Button	RE	ボタン	OBOE	
*	8	VK924900	Button	RE	ボタン	TRUM-PET	
*	9	VK925000	Button	RE	ボタン	TO LOWER	
*	10	VK928400	Button	BR	ボタン	CONTRA BASS	
*	11	VK928500	Button	BR	ボタン	ELEC.BASS	
*	12	VK928600	Button	BR	ボタン	1	
*	13	VK928700	Button	BR	ボタン	ORGAN BASS	
*	14	VK928800	Button	BR	ボタン	TUBA	
*	15	VK928900	Button	BR	ボタン	TO LOWER	
*	16	VK787000	Lens	(3)	音色レンズ（３連）	4pcs	02

*New Parts (新規部品)　　ランク：Japan only

	Ref. No.	Part No.	Description		部品名	Remarks	ランク
			<Switch Escutcheon Ass'y>	(C)	<スイッチ枠(C)Ass'y>	EL-90	
*	1	VK799000	Escutcheon	(C)	スイッチ枠（C）		
*	2	VK784400	Volume Button		ボリュームボタン	14pcs	02
*	3	VK783300	Volume Lens		ボリュームレンズ	2pcs	02
*	4	VK929000	Button	Beige	ボタン	CONTRA BASS	
*	5	VK929100	Button	Beige	ボタン	ELEC.BASS	
*	6	VK929200	Button	Beige	ボタン	1	
*	7	VK929300	Button	Beige	ボタン	ORGAN BASS	
*	8	VK929400	Button	Beige	ボタン	TUBA	
*	9	VK929500	Button	Beige	ボタン	TO LOWER	
*	10	VK787000	Lens	(3)	音色レンズ（３連）	2pcs	02

*New Parts (新規部品)　　ランク：Japan only

■ SWITCH ESCUTCHEON Ass'y (D)（スイッチ枠Ass'y(D)）

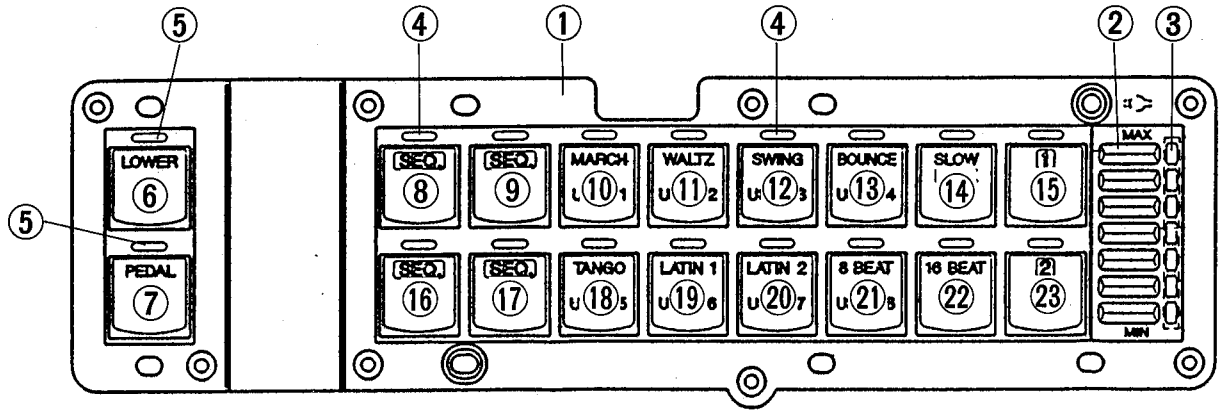

	Ref. No.	Part No.	Description		部品名	Remarks	ランク
			<Switch Escutcheon Ass'y>	(D)	<スイッチ枠(D)Ass'y>	EL-90	
*	1	VK799100	Escutcheon	(D)	スイッチ枠（D）		
*	2	VK784400	Volume Button		ボリュームボタン	7pcs	02
*	3	VK783300	Volume Lens		ボリュームレンズ	1pc.	02
*	4	VK786900	Lens	(4)	音色レンズ（４連）	4pcs	
*	5	VK787200	Lens	(1)	音色レンズ（単連）	2pcs	02
*	6	VK929600	Button	GY	ボタン	LOWER	
*	7	VK925400	Button	GY	ボタン	PEDAL	
*	8	VK929700	Button	GY	ボタン	SEQ.1	
*	9	VK929800	Button	GY	ボタン	SEQ.2	
*	10	VK929900	Button	GY	ボタン	MARCH USER 1	
*	11	VK930000	Button	GY	ボタン	WALTZ USER 2	
*	12	VK930100	Button	GY	ボタン	SWING USER 3	
*	13	VK930200	Button	GY	ボタン	BOUNCE USER 4	
*	14	VK930300	Button	GY	ボタン	SLOW ROCK A	
*	15	VK936700	Button	GY	ボタン	1 B	
*	16	VK930400	Button	GY	ボタン	SEQ.3	
*	17	VK930500	Button	GY	ボタン	SEQ.4	
*	18	VK930600	Button	GY	ボタン	TANGO USER 5	
*	19	VK930700	Button	GY	ボタン	LATIN 1 USER 6	
*	20	VK930800	Button	GY	ボタン	LATIN 2 USER 7	
*	21	VK931000	Button	GY	ボタン	8 BEAT USER 8	
*	22	VK931100	Button	GY	ボタン	16 BEAT C	
*	23	VK936800	Button	GY	ボタン	2 D	

*New Parts（新規部品）

ランク：Japan only

■ SWITCH ESCUTCHEON Ass'y (E)/(F) (スイッチ枠Ass'y(E)/(F))

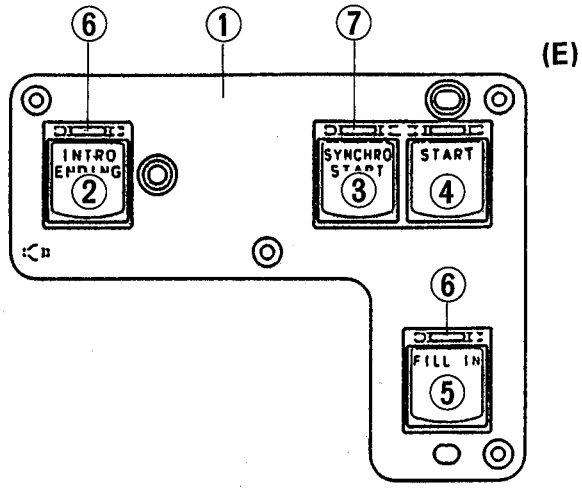

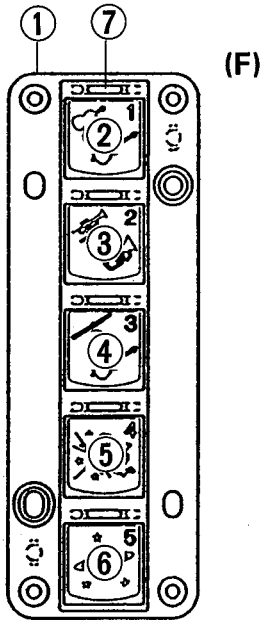

	Ref. No.	Part No.	Description		部品名	Remarks	ランク
			<Switch Escutcheon Ass'y>	(E)	<スイッチ枠(E)Ass'y>	EL-90	
*	1	VK786600	Escitcheon	(E)	スイッチ枠 (E)		06
*	2	VK931200	Button	GY	ボタン	INTRO. ENDING	
*	3	VK931300	Button	GY	ボタン	SYNCHRO START	
*	4	VK931400	Button	GY	ボタン	START	
*	5	VK931500	Button	GY	ボタン	FILL IN	
*	6	VK787200	Lens	(1)	音色レンズ (単連)	2pcs	02
*	7	VK787100	Lens	(2)	音色レンズ (2連)	1pc.	02

*New Parts (新規部品)

ランク : Japan only

	Ref. No.	Part No.	Description		部品名	Remarks	ランク
			<Switch Escutcheon Ass'y>	(F)	<スイッチ枠(F)Ass'y>	EL-90	
*	1	VK786700	Escutcheon	(F)	スイッチ枠 (F)		06
*	2	VK931600	Button	GY	ボタン	1 (REG.MEMORY)	
*	3	VK931700	Button	GY	ボタン	2 (REG.MEMORY)	
*	4	VK931800	Button	GY	ボタン	3 (REG.MEMORY)	
*	5	VK931900	Button	GY	ボタン	4 (REG.MEMORY)	
*	6	VK932000	Button	GY	ボタン	5 (REG.MEMORY)	
*	7	VK787200	Lens	(1)	音色レンズ (単連)	5pcs	02

*New Parts (新規部品)

ランク : Japan only

■ KEYBOARD ASSEMBLY(UK,LK) (FS鍵盤Ass'y(UK, LK))

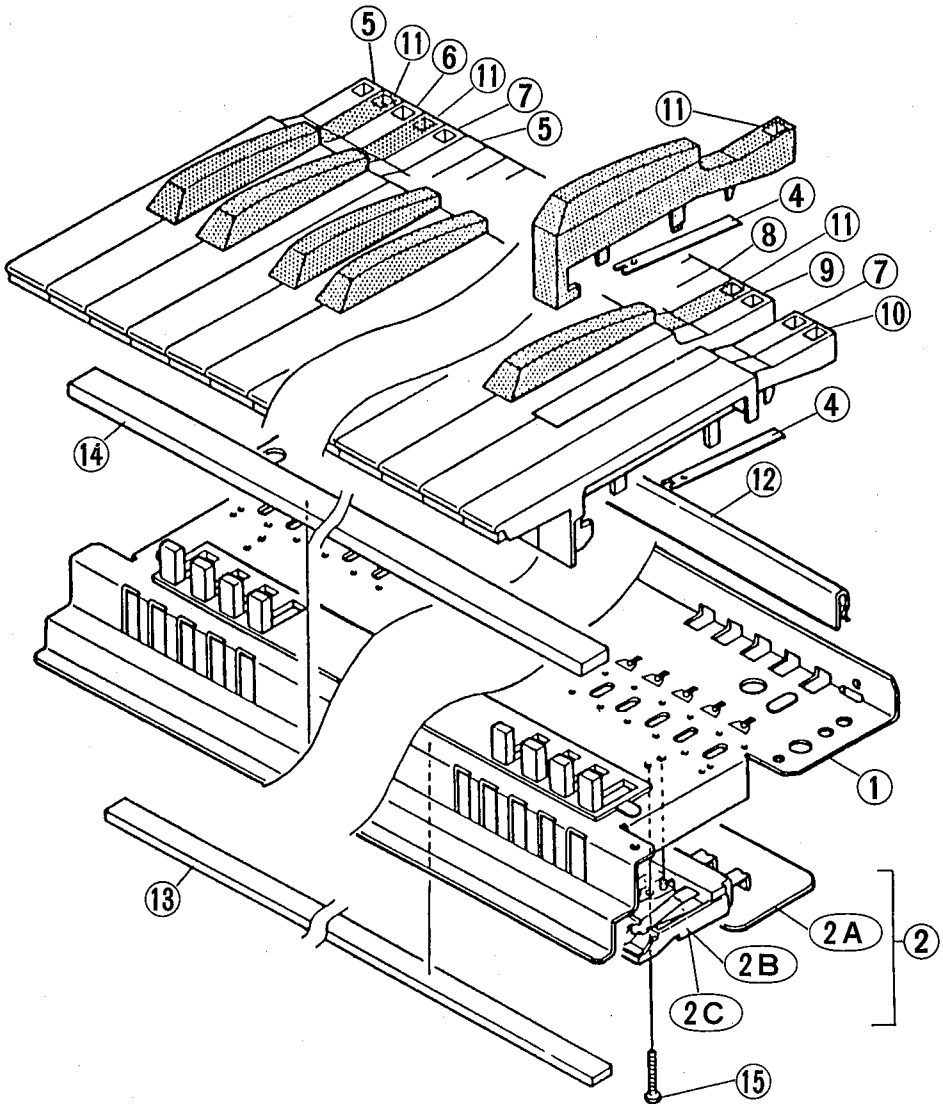

	Ref. No.	Part No.	Description		部品名	Remarks	ランク
*		VK960700	<Keyboard Assembly >	C49 K12	<FS鍵盤Ass'y>	UK (EL-90)	34
*		VK960600	<Key Board Assembly>	C49 K12	<FS鍵盤Ass'y>	LK	33
	1	--	MK Frame	C49 AT	MKフレーム		
*	2	VK164300	Switch Unit		スイッチユニット		22
*	2A	VK749000	Circuit Board	MK	MKシート		15
	2B	NB107120	Switch Assembly	12Q FS	スイッチAss'y		08
	2C	NB107110	Switch Assembly	13K FS	スイッチAss'y		08
	4	AA055430	Key Spring		鍵バネ	49pcs	02
	5	NB107540	White Key Assembly	C,F	白鍵Ass'y	8pcs	03
	6	NB107550	White Key Assembly	D	白鍵Ass'y	4pcs	03
	7	NB107560	White Key Assembly	B,E	白鍵Ass'y	8pcs	03
	8	NB107570	White Key Assembly	G	白鍵Ass'y	4pcs	03
	9	NB107580	White Key Assembly	A	白鍵Ass'y	4pcs	03
	10	NB107590	White Key Assembly	C'	白鍵Ass'y	1pc.	03
	11	NB107600	Black Key Assembly		黒鍵Ass'y	20pcs	03
	12	CB045770	Stopper		ストッパー		02
*	13	VK984500	Felt	665X6X3 RE	フェルト		03
*	14	VJ479500	PC Sensor	MK-FS49TO	PCセンサー		10
*	15	EP600810	Bind Head Screw	3.0X16 ZMC2BL	+バインドエバタイト	12pcs	01

*New Parts (新規部品)

ランク : Japan only

■PANEL CASE UNIT（パネルケースユニット）

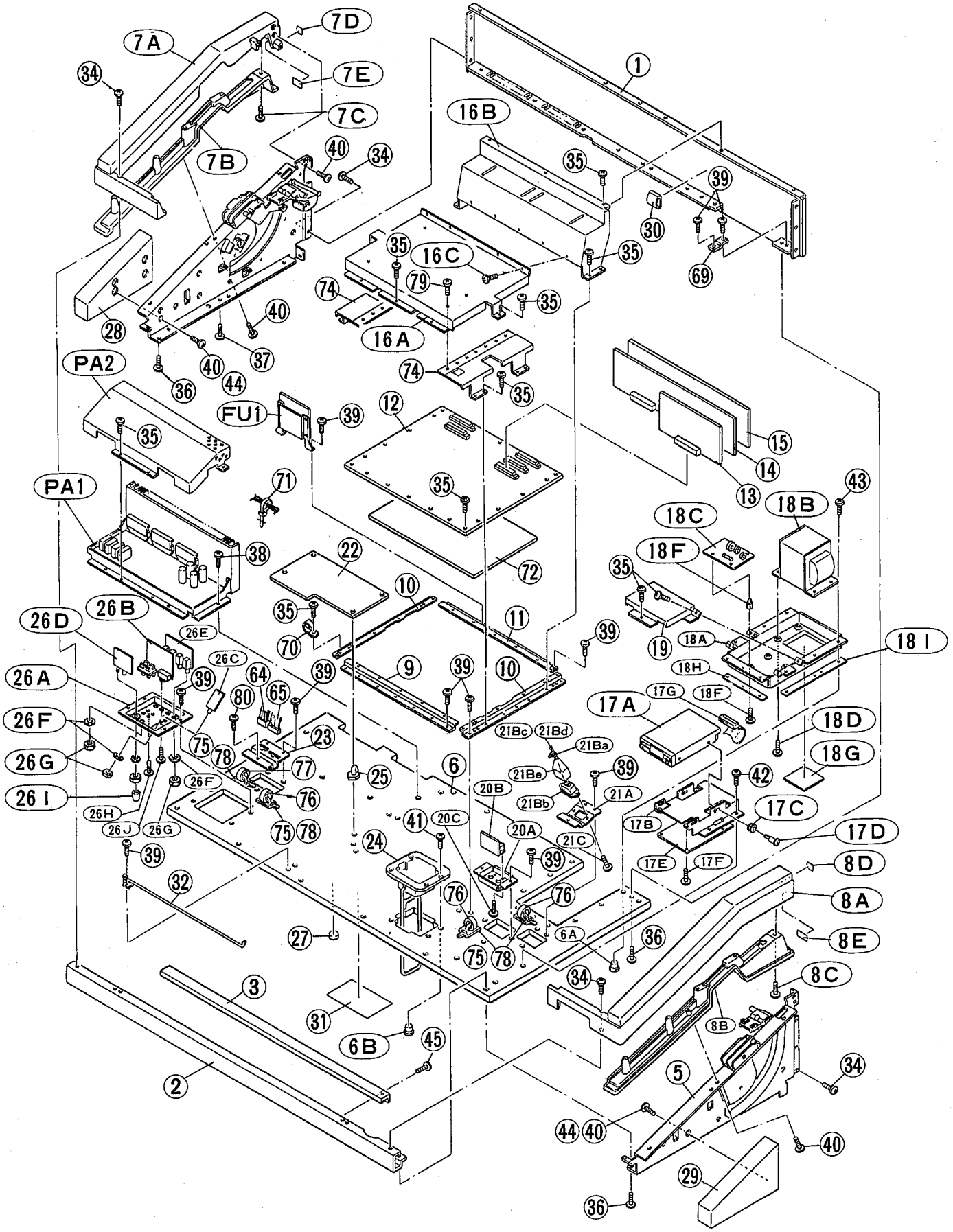

Ref. No.	Part No.	Description		部品名	Remarks	ランク
		<Panel Case Unit>		<ﾊﾟﾈﾙｹｰｽﾕﾆｯﾄ>	EL-90	
* 1	VL384000	Back Top Board		背面カマチ	J	16
* 1	VL383900	Back Top Board		背面カマチ	U,C,H,D,B,A,X,M	17
* 2	VK784600	Front Rail		口棒	J	10
* 2	VJ915300	Front Rail		口棒	U,C,H,D,B,A,X,M	10
* 3	VJ955900	Cover, Front Rail		口棒カバー		09
4	--	Arm Unit	Left	腕木ユニット（左）		
5	--	Arm Unit	Right	腕木ユニット（右）		
6	--	Keybad Assembly		棚板Ａss'y		
* 6A	VD238200	Nut	B4.0X9.5 ZMC2BL	鬼目ナット	16pcs	01
6B	VB923300	Nut	B3.0X9.5 ZMC2BL	鬼目ナット	4pcs	01
* 7	VJ952100	Arm Cap Unit	Left	アームユニット（左）		11
7A	--	Arm Cap	Left	アームキャップ（左）		
7B	--	Arm Under Case	Left	アーム下ケース（左）		
* 7C	EP600270	Bind Head Tapping Screw	3.0X10 ZMC2Y	＋バインドＰタイト	5pcs	01
* * 7D	VL504200	Cushion	BL (1)	クッション（１）	1pc.	
* * 7E	VL551900	Cushion	BL (2)	クッション（２）	2pcs	
* 8	VJ952300	Arm Cap Unit	Right	アームユニット（右）		11
8A	--	Arm Cap	Right	アームキャップ（右）		
8B	--	Arm Under Case	Right	アーム下ケース（右）		
* 8C	EP600270	Bind Head Tapping Screw	3.0X10 ZMC2Y	＋バインドＰタイト	5pcs	01
* * 8D	VL504200	Cushion	BL (1)	クッション（１）	1pc.	
* * 8E	VL551900	Cushion	BL (2)	クッション（２）	2pcs	
* 9	VK783100	Angle Bracket, DM	(A)	ラック金具（Ａ）	1pc.	03
* 10	VK783200	Angle Bracket, DM	(B)	ラック金具（Ｂ）	2pcs	03
* * 11	VK783400	Angle Bracket, DM	(C)	ラック金具（Ｃ）	1pc.	04
* * 12	VK747800	Circuit Board	DM	ＤＭシート	J S/#1001～	93
* * 12	VK836600	Circuit Board	DM(4)	ＤＭシート		93
* * 13	VK748000	Circuit Board	ROM1	ＲＯＭ１シート	J S/#1001～	43
* * 13	VK836900	Circuit Board	ROM1(4)	ＲＯＭ１シート		45
* * 14	VK748200	Circuit Board	ROM2	ＲＯＭ２シート	J S/#1001～	70
* * 14	VK837300	Circuit Board	ROM2(4)	ＲＯＭ２シート		72
* * 15	VK748300	Circuit Board	EF	ＥＦシート	J S/#1001～	48
* * 15	VK837400	Circuit Board	EF(4)	ＥＦシート		52
16	--	DM Cover Assembly		ＤＭカバーＡss'y		
* 16A	VK782300	Shield Cover, DM		ＤＭシールドカバー		
* 16B	VK782700	Shield Cover, DM	Rear	DMｼｰﾙﾄﾞｶﾊﾞｰ(後)		
16C	ED030066	Bind Head Screw	3.0X6 ZMC2Y	＋バインドＳタイト	3pcs	01
17	--	MDR Assembly		ＭＤＲＡss'y		
* 17A	VJ437000	Floppy Disk Drive	3.5" 1M/2M BL	ＦＤＤ		31
* 17B	VK782800	Angle Bracket, MDR		ＭＤＲ取り付板		05
17C	VC886900	Insulator, FDD		ＦＤＤインシュレータ	4pcs	01
17D	VF916400	Cap Screw	3.0X7.5 ZMC2Y	段付きカップネジ	4pcs	01
* 17E	VK748400	Circuit Board	MDR	ＭＤＲシート	J S/#1001～	36
* 17E	VK837500	Circuit Board	MDR (4)	ＭＤＲシート		38
* * 17F	EP600070	Bind Head Screw	3.0X8 ZMC2Y	＋バインドＳタイト	4pcs	01
* * 17G	VK793200	Flat Cable	34P-80	フラットケーブル束線	MDR_CN2-FDD_CN2	08
18	--	Case Assembly, PT		トランスケースＡss'y		
* 18A	VK783600	Case, Power Transformer		トランスＰＲＭケース		09
* * 18B	XI083A00	Power Transformer		電源トランス	J	19
* * 18B	XI158A00	Power Transformer		電源トランス	D,H,B,A	19
* * 18B	XI157B00	Power Transformer		電源トランス	U,C	
* * 18B	XI159A00	Power Transformer		電源トランス	X,M	19
* * 18C	VJ636200	Circuit Board	PRM	ＰＲＭシート	J	10
* * 18C	VJ636400	Circuit Board	PRM	ＰＲＭシート	D,H,B,A	11
* * 18C	VJ636300	Circuit Board	PRM	ＰＲＭシート	U,C	11
* * 18C	VJ636500	Circuit Board	PRM	ＰＲＭシート	X,M	11
* * 18D	VI693100	Bind Head Screw	4.0X8 ZMC2BL	＋バインドＳタイト	4pcs	01
* * 18E	VK919700	Bind Head Tapping Screw	3.5X8 ZMC2BL	＋バインドＴＰ２種	4pcs	
18F	VF029400	Spacer		タッピングスペーサー	4pcs	01
18G	--	Felt	BL	フェルト	1pc.	
* 18H	VL383500	Insulator	(B) T2×125×16	インシュレータ（Ｂ）	1pc.	
* 18I	VL383400	Insulator	(A) T2×195×16	インシュレータ（Ａ）	2pcs	
* 19	VL785000	Cover, PRM		ＰＲＭカバー		13
20	--	MIDI Unit		ＭＩＤＩユニット		
* 20A	VJ886100	Plate, MIDI Jack		ＭＩＤＩジャック板	MIDI IN OUT	06
* 20B	VK836400	Circuit Board	MIDI	ＭＩＤＩシート		07
* 20C	VK023700	Pan Head Tapping Screw	3.0X8 ZMC2BL	＋ナベＴＰ２種	2pcs	
21	--	AC Unit		ＡＣユニット		
* 21A	VJ930000	AC Plate		ＡＣプレート	AC INLET	05
21B	--	Inlet Wire	4P-200	インレット束線	AC IN-PRM_CN2	
21Ba	CB069250	Cord Clamper	BK-1	束線止め	1pc.	01
21Bb	LB202910	Connecter	PA-126-6.0	電源コネクタ		03
21Bc	--	Wire	GY	ビニール線		
21Bd	--	Wire	WH	ビニール線		
* 21Be	VE469200	Cover		プラグカバー	1pc.	
* * 21C	EP600530	Bind Head Screw	3.0X8 ZMC2BL	＋バインドＳタイト	2pcs	01
* 22	VK748600	Circuit Board	ANG	ＡＮＧシート		22
* 23	VJ929900	PS Plate		ＰＳプレート	SPEAKER, PEDAL	05

*New Parts（新規部品）

ランク：Japan only

	Ref. No.	Part No.	Description		部品名	Remarks	ランク
*	24	VJ965700	Knee Lever Unit	BL	ニーレバーユニット		11
	25	CB046030	Support	LCBS-04T	基板サポート	5pcs	01
	26	--	Accessory Unit		アクセサリーユニット		
*	26A	VJ885800	Accessory Case		アクセサリーケース		06
*	26B	VK749300	Circuit Board	AUX	AUXシート		10
*	26C	VJ660100	Circuit Board	HP	HPシート		13
*	26D	VJ659500	Circuit Board	MIC	MICシート		09
*	26E	VK749100	Circuit Board	RA	RAシート		09
*	26F	VJ869400	Washer	BL	ワッシャー	6pcs	02
*	26G	VK963200	Nut	12X14X2 MFZN2BL	管用ナット	6pcs	
*	26H	VK023700	Pan Head Tapping Screw	3.0X8 ZMC2BL	+ナベTP2種	1pc.	
	26I	CB028970	Knob	BL	ツマミ	MIC. VOL	01
*	26J	VK963300	Pan Head Screw	3.0X8 MFZN2BL	+ナベSタイト	1pc.	
	27	CB002050	Rubber Button	BL	ゴムボタン	1pc.	01
*	28	VL444900	Arm Assembly	Left	腕木Ass'y(左)	J	
*	28	VJ954900	Arm Assembly	Left	腕木Ass'y(左)	U,C,H,D,B,A,X,M	10
*	29	VL445000	Arm Assembly	Right	腕木Ass'y(右)	J	07
*	29	VJ955000	Arm Assembly	Right	腕木Ass'y(右)	U,C,H,D,B,A,X,M	10
*	30	VD722700	Clip	SC-1115	シェルクリップ	4pcs	02
	31	--	Name Plate		銘板		
*	32	VK895700	Stay		ステー		06
*	34	VI693100	Bind Head Screw	4.0X8 ZMC2BL	+バインドSタイト	10pcs	01
	35	ED030066	Bind Head Screw	3.0X6 ZMC2Y	+バインドSタイト	36pcs	01
	36	VA835900	Trus Head Screw	4.0X16 ZMC2BL	+トラスSタイト	12pcs	01
	37	--	Trus Head Tapping Screw	4.0X12 ZMC2BL	+トラスTP1種	4pcs	
*	38	EN640020	Trus Head Tapping Screw	4.0X10 ZMC2Y	+トラスTP1種	4pcs	01
*	39	EP030230	Bind Head Tapping Screw	3.5X10 ZMC2Y	+バインドTP1種	31pcs	01
*	40	VA835700	Bind Head Screw	4.0X16 ZMC2BL	+バインドPタイト	16pcs	01
	41	ED030146	Bind Head Screw	3.0X14 ZMC2Y	+バインド小ネジ	4pcs	01
	42	EC040106	Trus Head Screw	4.0X10 ZMC2Y	+トラス小ネジ	4pcs	01
	43	ED040146	Bind Head Screw	4.0X14 ZMC2Y	+バインド小ネジ	8pcs	01
*	44	EP040220	Bind Head Tapping Screw	4.0X25 ZMC2Y	+バインドTP1種	8pcs	01
*	45	EP600070	Bind Head Screw	3.0X8 ZMC2Y	+バインドSタイト	3pcs	01
*	64	VJ881300	Cable, PKA	16P	PKA束線	DM_CN3-SM	08
*	65	VJ883100	Cable, SP	12P	SP束線	SM-PU_CN17,18	07
	69	VI317500	Support		補強板	2pcs	01
	70	CB817510	Cord Clamper	S-14B	束線止め	2pc.	01
	71	CB070450	Cord Clamper	L=100	束線止め	20pcs	01
*	72	VL383600	Cushion, DM Circuit Board	BL	シートクッション		07
*	74	VL659800	Side Ange,DM		DMサイドAss'y		08
	75	VF852500	Clamp	UL-13	クランプ	4pcs	02
	76	VB933800	Ferrite Core	BP53RB310190N0A	フェライトコア	3pcs	03
*	77	VL644800	Ferrite Core	BP53RB280160N3M	フェライトコア	1pc.	03
*	78	EM030240	Flat Head Tapping Screw	3.0X10 ZMC2Y	+皿TP1種	4pcs	
	79	ED040066	Bind Head Screw	4.0X6 ZMC2Y	+バインドSタイト	8pcs	01
*	80	EP030340	Bind Head Tapping Screw	3.5X12 ZMC2BL	+バインドTP1種	1pc.	01
*	FU1	VL453600	FU Unit		FUユニット	U,C	18
*	PA1	VJ963800	Power Amplifier Unit		電源アンプ	J,D,X,M,A,B	36
*	PA1	VJ961100	Power Amplifier Unit		電源アンプ	H	36
*	PA1	VK965700	Power Amplifier Unit		電源アンプ	C	37
*	PA1	VJ963700	Power Amplifier Unit		電源アンプ	U	37
*	PA2	VK397100	Cover, PU	BL	PUカバー	U	12
		--	Earth Wire	L=80	アース線	1pc.	
		--	Connector Assembly	3P-100	KRD-KRD束線	DM_CN4-ANG_CN9	
		--	Connector Assembly	3P-750	KRD-KRD束線	DM_CN12-ANG_C13	
		--	Connector Assembly	4P-450	KRD-KRD束線	DM_CN9-KNEE_CN1	
		--	Connector Assembly	4P-1050	VH-VH束線	DM_CN14-ANG_CN2	
		--	Connector Assembly	4P-300	KRD-KRD束線	ANG_CN12-MIC_C1	
		--	Connector Assembly	6P-450	KRD-KRD束線	PU_CN19-HP_CN1	
		--	Connector Assembly	6P-350	KRD-KRD束線	DM_CN8-MIDI_CN1	
		--	Connector Assembly	9P-300	KRD-KRD束線	DM_CN10-MDR_CN1	
		--	Connector Assembly	9P-250	KRD-KRD束線	ANG_CN11-RA_CN1	
		--	Connector Assembly	10P-700	KRD-KRD束線	DM_CN15-ANG_C10	
		--	Connector Assembly	10P-300	KRD-KRD束線	ANG_CN4-AUX_CN3	
		--	Connector Assembly	10P-200	KRD-KRD束線	ANG_CN5-PU_CN15	
		--	Connector Assembly	2P-900	VH-VH束線	DM_CN13-PU_CN14	
		--	Connector Assembly	3P-200	VH-VH束線	ANG_CN6-PU_CN13	
		--	Connector Assembly	2P-3P-550	VH-VH束線	ANG_CN8-AUX_CN1	
		--	Connector Assembly	4P-1200	FDD電源束線	ANG_CN7-FDD_CN1	

*New Parts (新規部品)

ランク : Japan only

■ARM UNIT (LEFT/RIGHT)（腕木ユニット（左/右））

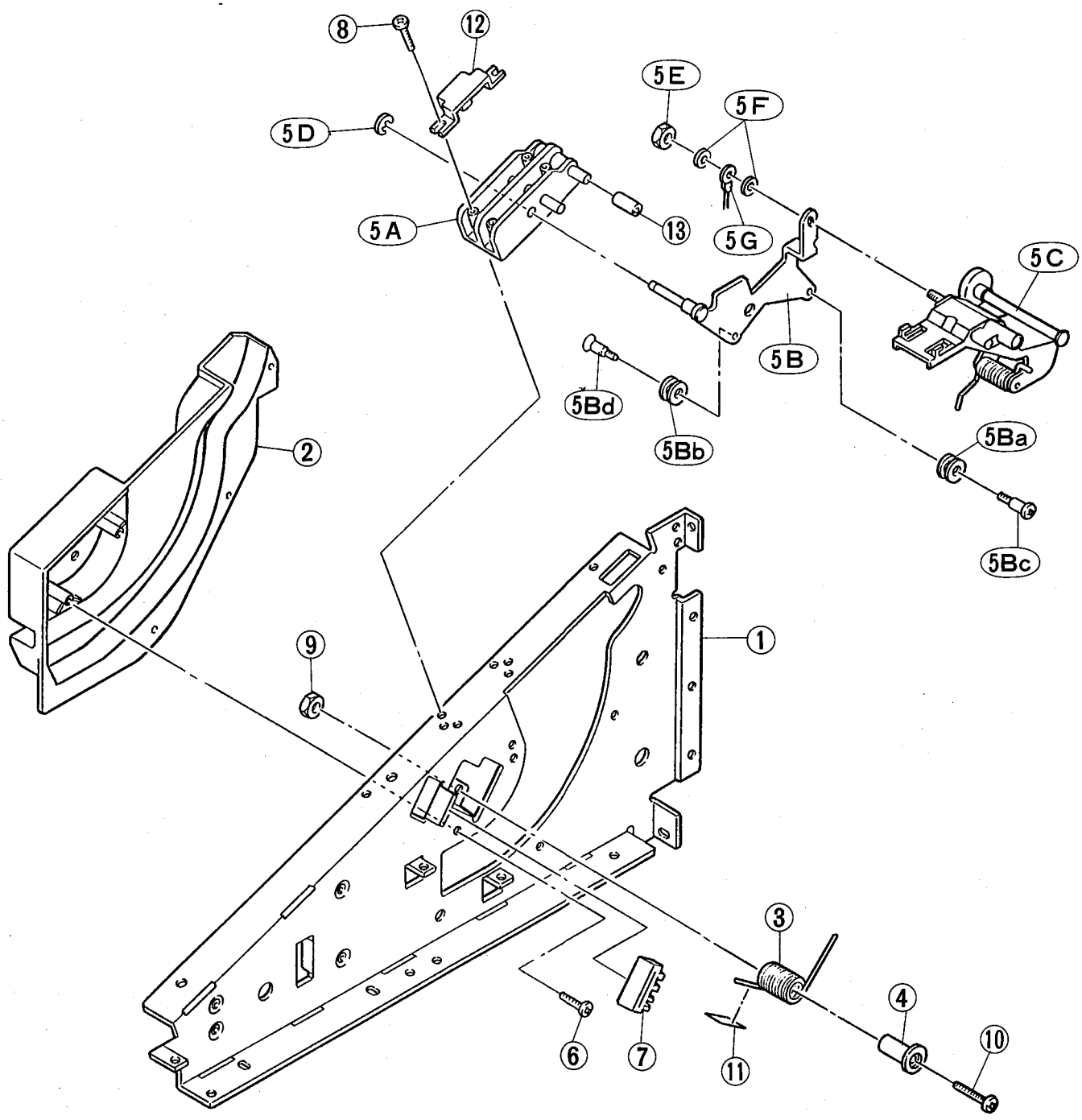

※The figure indicates the left arm unit.
図は、腕木ユニット（左）

	Ref. No.	Part No.	Description		部品名	Remarks	ランク
			<Arm Unit>	Left	<腕木ユニット(左)>	EL-90	
*	1	VJ507400	Angle, Arm	Left	腕木金具 (左)		
* *	2	VL019200	Guide Assembly	Left	ガイドAss'y(左)		
* *	3	VJ952900	Spring	Left	バネ (左)	1pc.	
*	4	VK962500	Shaft, Spring		バネ固定軸	1pc.	02
	5	--	Shaft Unit	Left	軸ユニット (左)		
*	5A	VJ879800	Shaft Holder	Left	軸受け (左)		05
* *	5B	VJ953500	Lever Unit	Left	レバーユニット (左)		
* *	5Ba	VJ804000	Pulley	(A)	プーリー (A)	1pc.	02
*	5Bb	VJ989000	Pulley	(B)	プーリー (B)	1pc.	02
*	5Bc	VJ954100	Screw	4.0X6	段付きネジ	1pc.	01
* *	5Bd	VJ996700	Screw	4.0X6	段付き平小ネジ	1pc.	01
*	5C	VJ953700	Angle Unit, Cover	Left	蓋受け金具ユニット		
	5D	EV501506	Stop Ring	φ5.0	E形止め輪	1pc.	01
*	5E	VL034400	Hexagonal Nut	φ6.0 ZMC2BL	六角ナット	1pc.	
*	5F	VI240700	Flat Washer		平座金みがき丸	2pcs	01
	5G	--	Earth Wire	L=55	アース線		
*	6	VA847500	Bind Head Tapping Screw	4.0X14 ZMC2Y	+バインドPタイト	5pcs	01
* *	7	VJ953400	Cushion	BL	クッション	1pc.	03
*	8	VD022800	Bind Head Screw	4.0X25 ZMC2Y	+バインドSタイト	4pcs	01
*	9	ES200170	Hexagonal Nut	φ6.0 ZMC2BL	六角ナット	1pc.	01
* *	10	VK962600	Pan Head Screw	6.0X35 ZMC2Y	+ナベ小ネジ	1pc.	
*	11	VL397300	Plate		保護プレート	1pc.	
* *	12	VL445300	Angle, Earth	Left	アース金具 (左)	1pc.	
*	13	VL670300	Tube	ESG-3	チューブ	1pc.	

*New Parts (新規部品)　　ランク：Japan only

	Ref. No.	Part No.	Description		部品名	Remarks	ランク
			<Arm Unit>	Right	<腕木ユニット(右)>	EL-90	
*	1	VJ507600	Angle, Arm	Right	腕木金具 (右)		
* *	2	VL019300	Guide Assembly	Right	ガイドAss'y(右)		
* *	3	VJ953000	Spring	Right	バネ (右)	1pc.	
*	4	VK962500	Shaft, Spring		バネ固定軸	1pc.	02
	5	--	Shaft Unit		軸ユニット (右)		
*	5A	VJ879900	Shaft Holder	Right	軸受け (右)		05
* *	5B	VJ953600	Lever Unit	Right	レバーユニット (右)		
* *	5Ba	VJ804000	Pulley	(A)	プーリー (A)	1pc.	02
*	5Bb	VJ989000	Pulley	(B)	プーリー (B)	1pc.	02
*	5Bc	VJ954100	Screw	4.0X6	段付きネジ	1pc.	01
* *	5Bd	VJ996700	Screw	4.0X6	段付き平小ネジ	1pc.	01
*	5C	VJ953800	Angle Unit, Cover	Right	蓋受け金具ユニット		
	5D	EV501506	Stop Ring	φ5.0	E形止め輪	1pc.	01
*	5E	VL034400	Hexagonal Nut	φ6.0 ZMC2BL	六角ナット	1pc.	
*	5F	VI240700	Flat Washer		平座金みがき丸	2pcs	01
	5G	--	Earth Wire	L=55	アース線		
*	6	VA847500	Bind Head Tapping Screw	4.0X14 ZMC2Y	+バインドPタイト	5pcs	01
* *	7	VJ953400	Cushion	BL	クッション	1pc.	03
*	8	VD022800	Bind Head Screw	4.0X25 ZMC2Y	+バインドSタイト	4pcs	01
* *	9	ES200170	Hexagonal Nut	φ6.0 ZMC2BL	六角ナット	1pc.	01
* *	10	VK962600	Pan Head Screw	6.0X35 ZMC2Y	+ナベ小ネジ	1pc.	
*	11	VL397300	Plate		保護プレート	1pc.	
* *	12	VL445400	Angle, Earth	Right	アース金具 (右)	1pc.	
*	13	VL670300	Tube	ESG-3	チューブ	1pc.	

*New Parts (新規部品)　　ランク：Japan only

■KNEE LEVER UNIT（ニーレバーユニット）

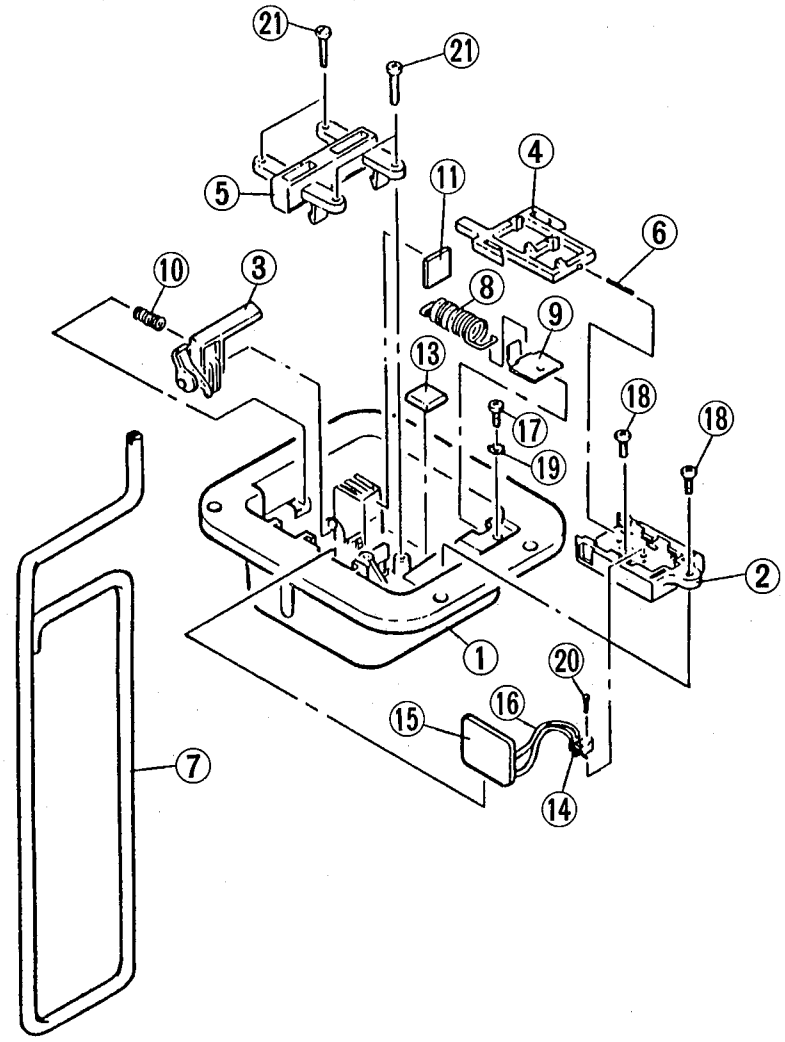

	Ref. No.	Part No.	Description		部品名	Remarks	ランク
*		VJ965700	<Knee Lever Unit>	BL	<ニーレバーユニット>	EL-90	11
	1	VC940300	Case	BL	ケース		03
	2	VB740200	Case Block	BL	ケースブロック		02
	3	VB445200	Actuator		アクチェータ		02
	4	VB445300	Actuator Switch		アクチェータスイッチ		01
	5	VB445400	Holder		レバー押さえ		02
	6	VB512500	Coil Spring		コイルバネ		01
	7	VB512700	Lever		レバー		07
	8	VB658300	Spring		スプリング		03
	9	AA046030	Hook		フック		01
	10	AA046050	Coil Spring		コイルスプリング		01
	11	VB513100	Felt	10X10X2 BL	フェルト		02
	13	VB513300	Bump-on	BL	バンポン		01
	14	VA228500	Micro Switch	SPPB13001A	マイクロスイッチ		01
*	15	VJ695800	Circuit Board	KNELEV	KNELEVシート		02
	16	--	Connector Assembly		束線		
	17	ED030066	Bind Head Screw	3.0X6 ZMC2Y	+バインド小ネジ	1pc.	01
	18	EP600280	Bind Head Tapping Screw	3.0X8 ZMC2Y	+バインドPタイト	2pcs	01
*	19	ET900010	Toothed Lock Washer	B3.0 ZMC2Y	歯付座金外歯形	1pc.	01
*	20	VA226000	Pan Head Tapping Screw	2.0X8 ZMC2BL	+ナベPタイト	1pc.	01
*	21	VB658700	Bind Head Tapping Screw	3.0X14 ZMC2Y	+バインドPタイト	4pcs	01

*New Parts（新規部品）

ランク：Japan only

■PEDAL UNIT（ペダルユニット）

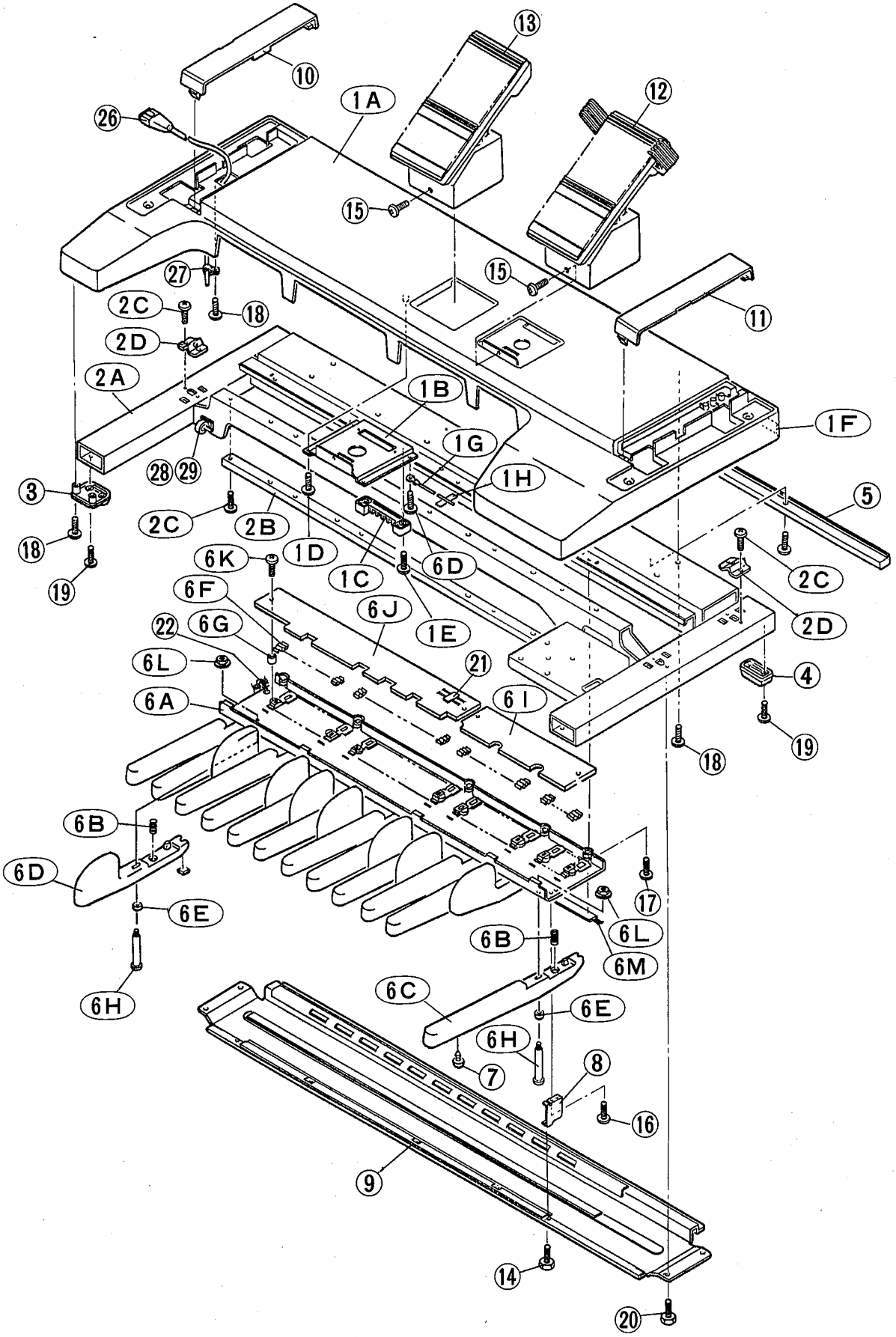

	Ref. No.	Part No.	Description		部品名	Remarks	ランク
			<Pedal Unit>		<ペダルユニット>	EL-90	
	1	--	PK Cover Assmbly	BL	ＰＫカバーＡss'y		
*	1A	VJ804400	PK Cover		ＰＫカバー	J,D,H,A,C,M,X,B	
*	1B	VJ842300	Holder, EXP	BL	ＥＸＰ取付板		06
*	1C	VJ804800	Block, EXP		ＥＸＰブロック		03
*	1D	VA847500	Bind Head Tapping Screw	4.0X14 ZMC2Y	＋バインドＰタイト	8pcs	01
	1E	ED040106	Bind Head Screw	4.0X10 ZMC2Y	＋バインドＳタイト	4pcs	01
	1F	--	Vibro-isolating Tape	1150×15×T0.5	防振テープ		
	1G	--	Earth Wire	L=170	アース線		
	1H	--	Adhesive Tape	12×50	粘着テープ		
	2	--	PK Frame Assembly	ZMC2Y	ＰＫフレームＡss'y		
	2A	--	PK Frame		ＰＫフレーム		
	2B	VC855500	Rail, Pedal Keyboard		ＰＫ取付レール		04
*	2C	EP600800	Bind Head Screw	4.0X8 ZMC2Y CE	＋バインドエバタイト	14pcs	01
*	2D	VJ914000	Angle Bracket, Side Board		側板固定アングル	4pcs	02
	3	VC998900	Foot, Front	BL	前スベリ座	2pcs	01
	4	VC998800	Foot, Rear	BL	後スベリ座	3pcs	01
*	5	VJ860000	Rail		スベリレール		08
*	6	VJ935200	Pedal Keyboard Assembly	M C20	ペダル鍵盤Ａss'y		41
	6A	VH534200	PK Frame	C20 2M	ＰＫフレーム		09
	6B	VH477200	Spring		バネ	20pcs	01
	6C	VH533500	White Key, Pedal	Dark GY	ペダル白鍵	12pcs	05
	6D	VH534100	Black Key, Pedal	BL	ペダル黒鍵	8pcs	04
	6E	CB057810	Support Rubber	BL	支点ゴム	20pcs	01
	6F	VB643100	Rubber Contact		可動導電ゴム	20pcs	01
	6G	VH535500	Spacer		スペーサー	13pcs	01
	6H	VG457700	Screw	4.0 ZMC2Y	段付きねじ	20pcs	01
*	6I	VK806400	Circuit Board	PKH	ＰＫＨシート		12
*	6J	VK806200	Circuit Board	PKL	ＰＫＬシート		14
*	6K	VH553800	Bind Head Screw	3.0X12 ZMC2Y	＋バインドＳタイト	13pcs	01
	6L	VH534900	Hexagonal Nut	φ4.0 ZMC2Y	フランジ付六角ナット	20pcs	01
	6M	VB641400	PC Sensor	PK-20P	ＰＣセンサー		17
	7	VD087400	Key Stopper	BL	キーストッパー	12pcs	01
	8	VH582100	Angle Bracket		取り付台	5pcs	01
*	9	VJ934800	PK Protector Assembly		ＰＫプロテクタAss'y		14
* *	10	VK023800	Side Cover Assembly	Left BL	ｻｲﾄﾞｶﾊﾞｰ(左) Ass'y		
* *	11	VK023900	Side Cover Assembly	Right BL	ｻｲﾄﾞｶﾊﾞｰ(右) Ass'y		
* *	12	VJ941500	EXP Pedal	2CH	ＥＸＰペダル		17
* *	13	VJ941600	EXP Pedal	2ND	ＥＸＰペダル		16
	14	VH888500	Hex, S-Tyte Screw	3.0X6 ZMC2Y	＋六角Ｓタイト	5pcs	01
*	15	VA221600	Bind Head Screw	4.0X10 ZMC2BL	＋バインド小ネジ	2pcs	01
	16	ED030066	Bind Head Screw	3.0X6 ZMC2Y	＋バインドＳタイト	5pcs	01
*	17	VA835200	Bind Head Screw	4.0X20 ZMC2Y	＋バインドＳタイト	5pcs	01
*	18	VA847500	Bind Head Tapping Screw	4.0X14 ZMC2Y	＋バインドＰタイト	36pcs	01
	19	ED040106	Bind Head Screw	4.0X10 ZMC2Y	＋バインドＳタイト	8pcs	01
	20	EV300100	Hex, S-Tyte Screw	4.0X10 ZMC2Y	六角Ｓタイト	10pcs	01
	21	--	Adhesive Tape	12X50	粘着テープ	6pcs	
	22	CB069250	Cord Clamper	BK-1	束線止め	1pcs	01
*	26	VJ881500	Cable, PKB	16P	ＰＫＢ束線	SM-PKL_CN1	12
	27	CB000710	Nylon Clamp	NK-5N	ナイロンクランプ	1pc.	01
	28	VF852500	Clamp	UL-13	クランプ	1pc.	02
*	29	VL644800	Ferrite Core	BP53RB280160N3M	フェライトコア	1pc.	03
		--	Connector Assembly	4P-350	ＫＲＤ－ＫＲＤ束線	PKH_CN6-EXP2_C1	
		--	Connector Assembly	6P-300	ＫＲＤ－ＫＲＤ束線	PKH_CN5-EXP-CN1	
		--	Wire	3P-600	ＰＣ束線		
		--	Wire	4P-250	ＰＣ束線		
		--	Connector Assembly	10P-200	ＫＲＤ－ＫＲＤ束線	PKL_CN2-PKH_CN3	
		--	Connector Assembly	9P-300	ＫＲＤ－ＫＲＤ束線	PKL_CN3-PKH_CN4	

*New Parts（新規部品）

ランク：Japan only

■EXPRESSION PEDAL（EXPペダル）

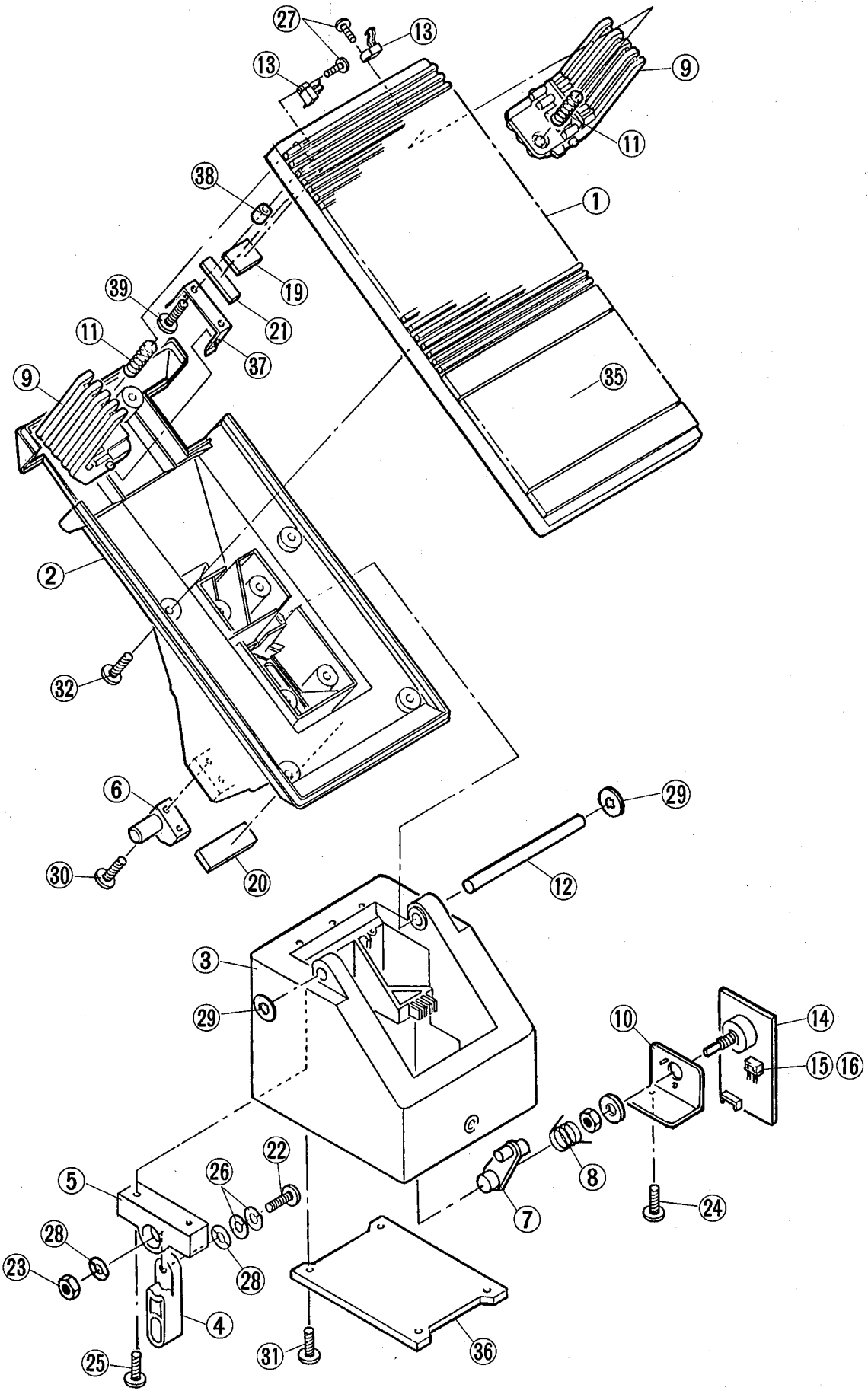

	Ref. No.	Part No.	Description		部品名	Remarks	ランク
*		VJ941500	<EXP Pedal>	2CH	<ＥＸＰペダル>	EL-90	17
*	1	VJ465700	Pedal Plate	BL	踏板		07
*	2	VJ465800	Cover, Pedal Plate	2CH BL	踏板カバー		07
*	3	VJ466100	Frame	BL	フレーム		07
	4	VB445500	Lever	(1)	トルクレバー（１）		02
*	5	VF614500	Lever	(2)	トルクレバー（２）		02
	6	VB445700	Block		ブロック		02
	7	VA227600	Actuator		アクチェータ		01
	8	VA228300	Coil Spring		ネジリコイルバネ		01
*	9	VJ465200	Lever	BL	レバー	2pcs	04
	10	VB511900	Plate		プレート		01
	11	VB512400	Coil Spring		コイルバネ	2pcs	01
*	12	VJ465000	Shaft		シャフト		02
	13	VA228500	Micro Switch	SPPB13001A	マイクロスイッチ	2pcs	01
*	14	VJ965100	Circuit Board	EXP	ＥＸＰシート		07
	15	VB304500	Connector Housing	PH 4P	コネクタハウジング		01
	16	VB936800	Contact	SPH-002T-P0.5S	コンタクト	4pcs	01
*	19	VJ466300	Felt	17X12.5X1	フェルト	2pcs	
*	20	VJ632200	Felt	32X12X2	フェルト	2pcs	
*	21	VJ466200	Felt	25X6X1.5	フェルト	2pcs	
	22	EA050126	Pan Head Screw	5.0X12 ZMC2Y	＋ナベ小ネジ	1pc.	01
	23	EV100056	Hexagonal Nut	φ5.0 ZMC2Y	六角ナット	1pc.	01
*	24	EP600290	Bind Head Tapping Screw	3.0X6 ZMC2Y	＋バインドＰタイト	1pc.	01
*	25	EP640110	Bind Head Tapping Screw	4.0X12 ZMC2Y	＋バインドＰタイト	2pcs	01
	26	VC299400	Oval Spring Washer	2L 5.0	皿バネ座金	2pcs	01
*	27	VA226000	Pan Head Tapping Screw	2.0X8 ZMC2BL	＋ナベＰタイト	2pcs	01
	28	VA226400	Flat Washer	5X10X1 ZMC2Y	平座金みがき丸	2pcs	01
	29	VB514600	Ring	φ6.0	ＳＥ型リング	2pcs	01
*	30	VB658700	Bind Head Tapping Screw	3.0X14 ZMC2Y	＋バインドＰタイト	2pcs	01
*	31	VB931600	Bind Head Tapping Screw	4.0X8 ZMC2BL	＋バインドＰタイト	4pcs	01
*	32	VC161100	Bind Head Tapping Screw	3.0X12 ZMC2BL	＋バインドＰタイト	10pcs	01
	35	VC116100	Pedal Mat	BL	踏板マット		05
*	36	VK955200	Cover		カバー		02
*	37	VK157200	Angle Bracket, Lever	SUS631-CSP-0	レバー取付金具	2pcs	03
	38	VB514400	Nut	φ3.0 SD-30-02	インサートナット	4pcs	01
*	39	EX000680	Pan Head Screw	3.0X5 SUS304	＋ナベ小ネジ	4pcs with SW	

*New Parts（新規部品）

ランク：Japan only

■EXPRESSION PEDAL(SECOND)（セカンドEXPペダル）

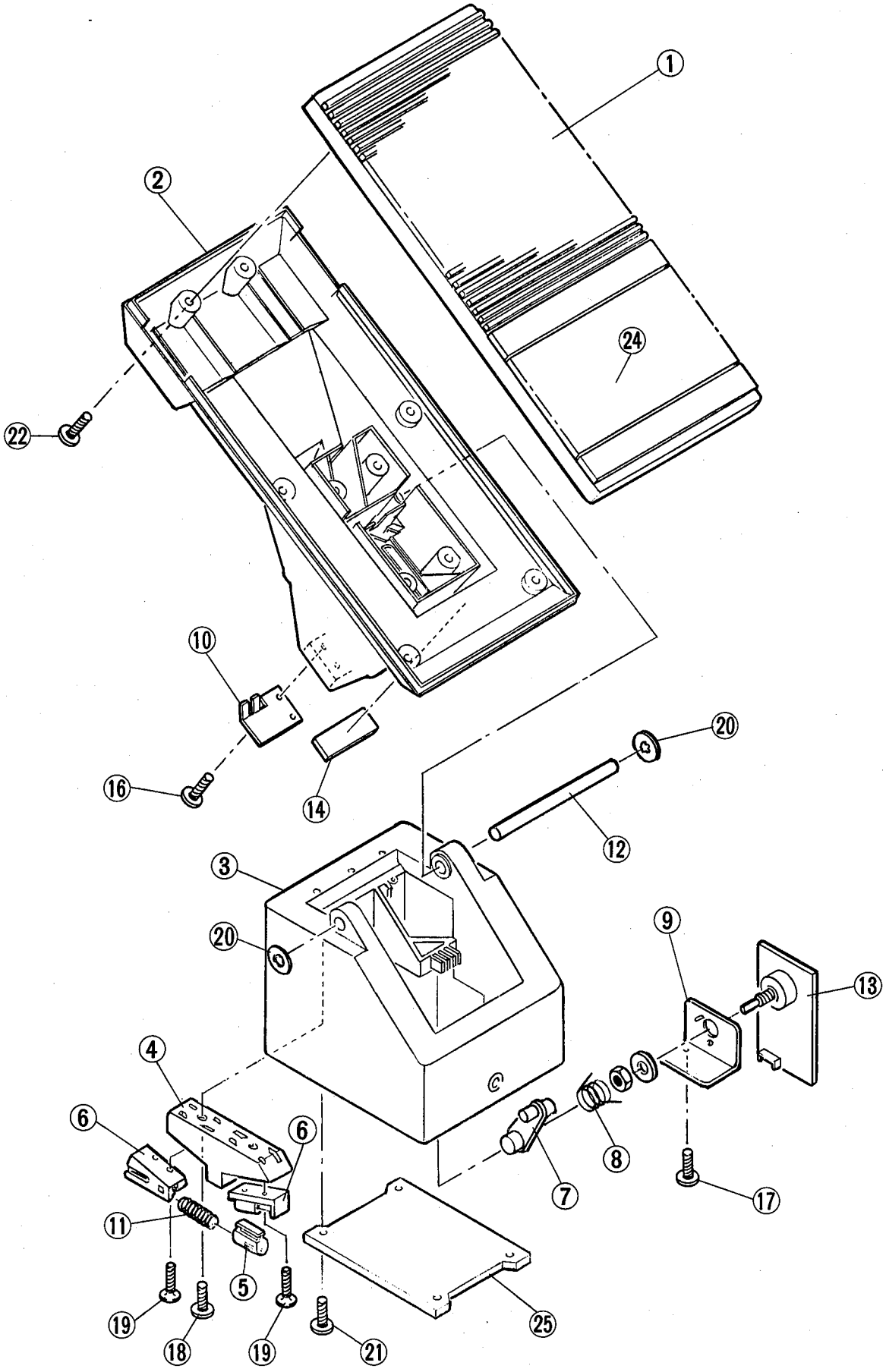

	Ref. No.	Part No.	Description		部品名	Remarks	ランク
*		VJ941600	<EXP Pedal>	2ND	<ＥＸＰペダル>	EL-90	16
*	1	VJ465700	Pedal Plate	BL	踏板		07
*	2	VJ466000	Cover, Pedal Plate	2ND BL	踏板カバー		07
*	3	VJ466100	Frame	BL	フレーム		07
	4	VB444800	Piston Base		ピストンベース		03
	5	VB445800	Piston		ピストン	2pcs	02
	6	VB445900	Piston Case		ピストンケース	2pcs	02
	7	VA227600	Actuator		アクチェータ		01
	8	VA228300	Coil Spring		ネジリコイルバネ		01
	9	VB511900	Plate		プレート		01
*	10	VL346600	Stopper		ストッパー		04
	11	VB512300	Coil Spring		コイルバネ	2pcs	01
*	12	VJ465000	Shaft		シャフト		02
*	13	VJ965300	Circuit Board	EXP	ＥＸＰシート		07
*	14	VJ632200	Felt	32X12X2	フェルト	2pcs	
*	16	EP600270	Bind Head Tapping Screw	3.0X10 ZMC2Y	＋バインドＰタイト	2pcs	01
*	17	EP600290	Bind Head Tapping Screw	3.0X6 ZMC2Y	＋バインドＰタイト	1pc.	01
*	18	EP640110	Bind Head Tapping Screw	4.0X12 ZMC2Y	＋バインドＰタイト	2pcs	01
*	19	EP640310	Flat Head Tapping Screw	4.0X16 ZMC2Y	＋皿Ｐタイト	4pcs	01
	20	VB514600	Ring	φ6.0	ＳＥ型リング	2pcs	01
*	21	VB931600	Bind Head Tapping Screw	4.0X8 ZMC2BL	＋バインドＰタイト	4pcs	01
*	22	VC161100	Bind Head Tapping Screw	3.0X12 ZMC2BL	＋バインドＰタイト	10pcs	01
	24	VC116100	Pedal Mat	BL	踏板マット		05
*	25	VK955200	Cover		カバー		02

*New Parts（新規部品）

ランク：Japan only

■ SPEAKER BOX UNIT（スピーカーボックスユニット）

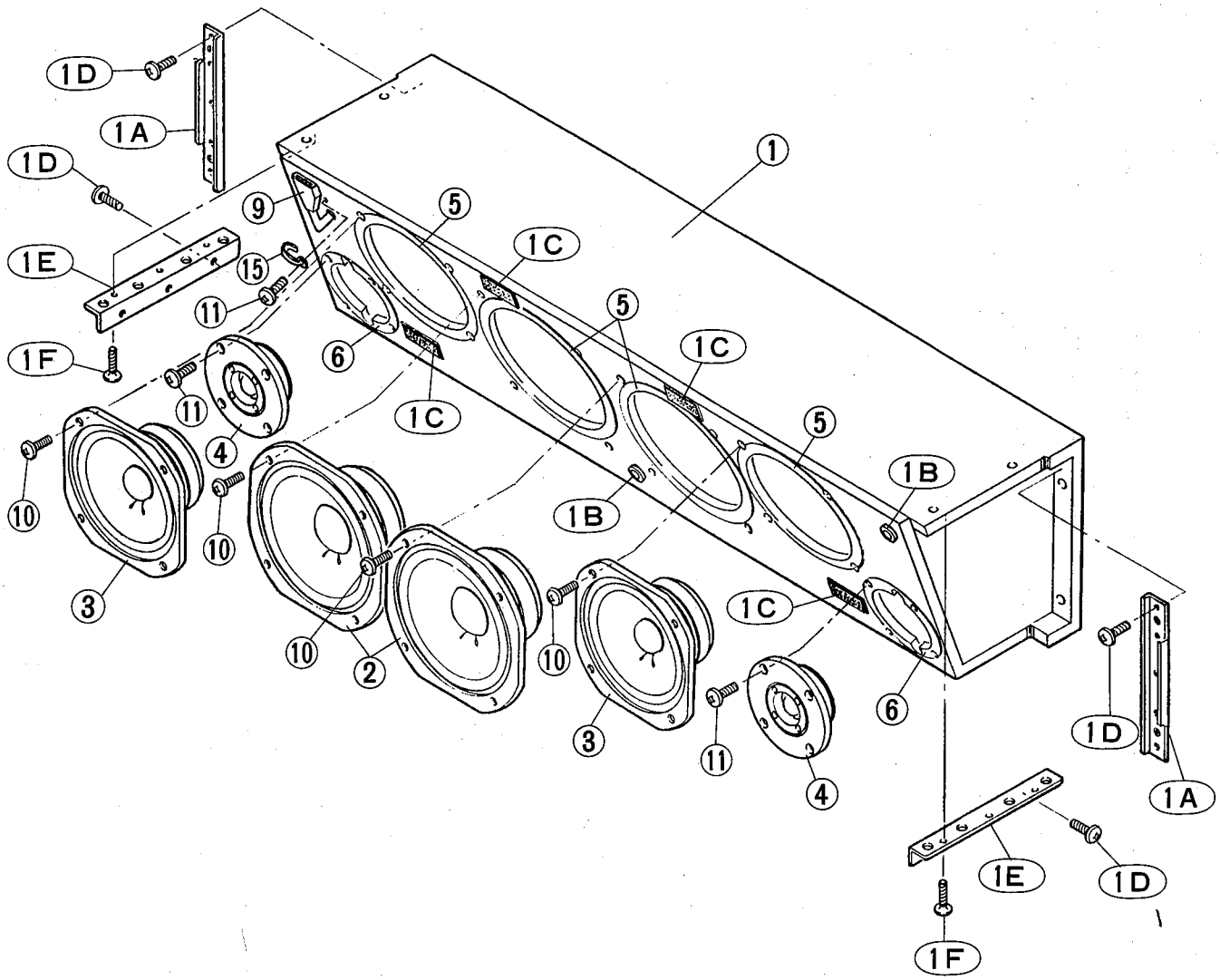

	Ref. No.	Part No.	Description		部品名	Remarks	ランク
			<Speaker Box Unit>		<ｽﾋﾟｰｶｰﾎﾞｯｸｽﾕﾆｯﾄ>	EL-90	
*	1	VJ932600	Speaker Box Assembly		ｽﾋﾟｰｶｰﾎﾞｯｸｽ Ass'y	J,D,H,A,C,M,X,B	
*	1A	VJ907600	Angle Bracket, Speaker Box		ＳＰ固定プレート	2pcs	03
	1B	CB074910	Latch		ラッチ	3pcs	01
*	1C	VJ933500	Dual Lock	BL	ベルクロ（メス）	4pcs	
*	1D	EP040230	Bind Head Tapping Screw	4.0X14 ZMC2Y	＋バインドＴＰ１種	16pcs	01
*	1E	VK843000	Angle		アングル	2pcs	05
*	1F	VH736500	Flat Head Tapping Screw	4.0X12 ZMC2Y	＋皿ＴＰ１種	6pcs	01
*	2	XJ227A00	Speaker	JA2130	スピーカー	Woofer	21
*	3	XJ228A00	Speaker	JA1816	スピーカー	Squawker	18
*	4	XI168A00	Speaker	2.5cm 8Ω 60W	スピーカー	Tweeter	
*	5	VJ933900	Packin'	GY	ペフ	4pcs	
	6	--	Packing		ＳＰ取り付パッキン	2pcs	
	9	--	Fasten	L=1m	ＳＭＲーファストン		
*	10	VB403600	Bind Head Screw	4.0X20 ZMC2BL	＋バインド小ネジ	16pcs	01
*	11	EP040250	Bind Head Tapping Screw	4.0X16 ZMC2BL	＋バインドＴＰ１種	9pcs	01
	15	CB817510	Cord Clamper	S-14B	束線止め		01

 *New Parts（新規部品）

ランク：Japan only

■BENCH（椅子）

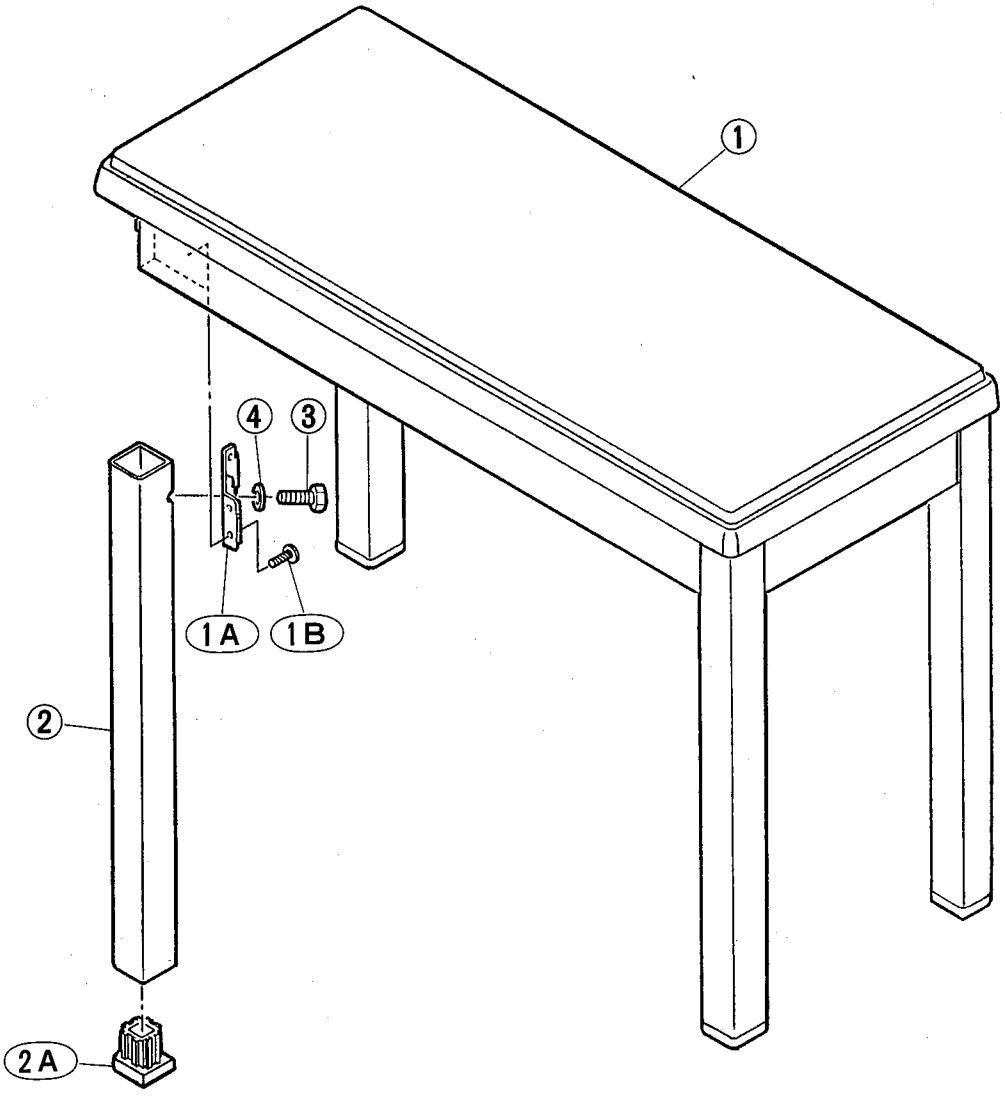

	Ref. No.	Part No.	Description		部品名	Remarks	ランク
			<Bench>		<椅子>	EL-90	
*	1	VK951500	Bench Board Assembly		座板Ass'y	J	
*	1	VK951300	Bench Board Assembly		座板Ass'y	X	
*	1	VK951800	Bench Board Assembly		座板Ass'y	B	
*	1	VK951400	Bench Board Assembly		座板Ass'y	C	
*	1	VK951700	Bench Board Assembly		座板Ass'y	U	
*	1A	VK958200	Angle Bracket		椅子コーナー金具	4pcs	03
*	1B	EP030170	Bind Head Tapping Screw	3.5X14 ZMC2Y	＋バインドＴＰ１種	1pc.	01
*	2	VK952000	Leg Pipe Assembly		脚柱Ass'y	J	10
*	2	VK951900	Leg Pipe Assembly		脚柱Ass'y	U,C,H,D,B,A,X,M	10
*	2A	VK957100	Cap		下キャップ	4pcs	02
	3	VA259300	Hexagonal Nut	10.0X45 ZMC2Y	六角ボルト（細目）	4pcs	01
	4	EX000230	Spring Washer	φ10.0 ZMC2Y	バネ座金	4pcs	

*New Parts（新規部品）

ランク：Japan only